DÜRKOPP ADLER

906-10
911-210-10

Additional Instructions

Stitch position optimization

IMPORTANT
READ CAREFULLY BEFORE USE
KEEP FOR FUTURE REFERENCE

All rights reserved.

Property of Dürkopp Adler GmbH and protected by copyright. Any reuse of these contents, including extracts, is prohibited without the prior written approval of Dürkopp Adler GmbH.

Copyright © Dürkopp Adler GmbH 2020

1 General information 3

2 Stitch position optimization..... 4

2.1 Assembling the stitch position optimization 4
2.2 Assembling the magnet valve..... 6
2.2.1 Assembling the Bürkert magnet valve 6
2.2.2 Assembling the Festo magnet valve..... 7
2.3 Checking the stitch position optimization..... 8
2.4 Programming the stitch position optimization 9

1 General information

Multi-directional stitching paths lead to difficulties with unreeling directions. This may result in the hook thread forming a festoon stitch i.e. double plaiting of the needle thread.

To prevent this festoon stitch occurring, stitch position optimization can be activated so the hook thread is guided to the left of the stitch hole. This will result in the needle always making the stitch to the right of the hook thread, thereby avoiding a festoon stitch.

Components of the kit

Check whether the scope of delivery for kit 0911 597474 is correct prior to installation.

Part numbrt	Quantity	Description
0911 597964	1	Stich position optimization, fitted
9202 002077	2	Cylinder screw M4x10
9710 063410	1	Magnet valve
9731 004034	1	Hose, yellow (1 m)
9731 005004	1	Hose (1 m)
0791 911715 EN	1	Additional Instructions

2 Stitch position optimization

2.1 Assembling the stitch position optimization

Fig. 1: Assembling the stitch position optimization (1)

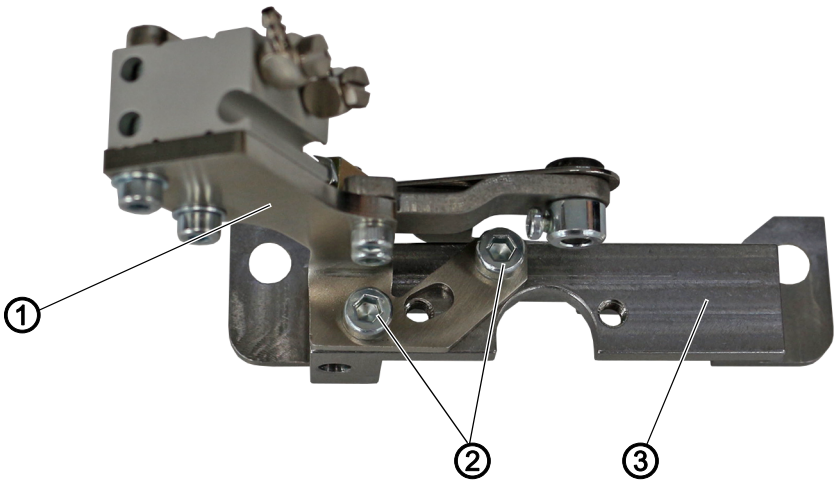

(1) - Stitch position optimization
(2) - Screws
(3) - Throat plate holder

To assemble the stitch position optimization:

1. Disassemble the throat plate holder (3).
2. Screw stitch position optimization (1) to throat plate holder (3) with screws (2).

Fig. 2: Assembling the stitch position optimization (2)

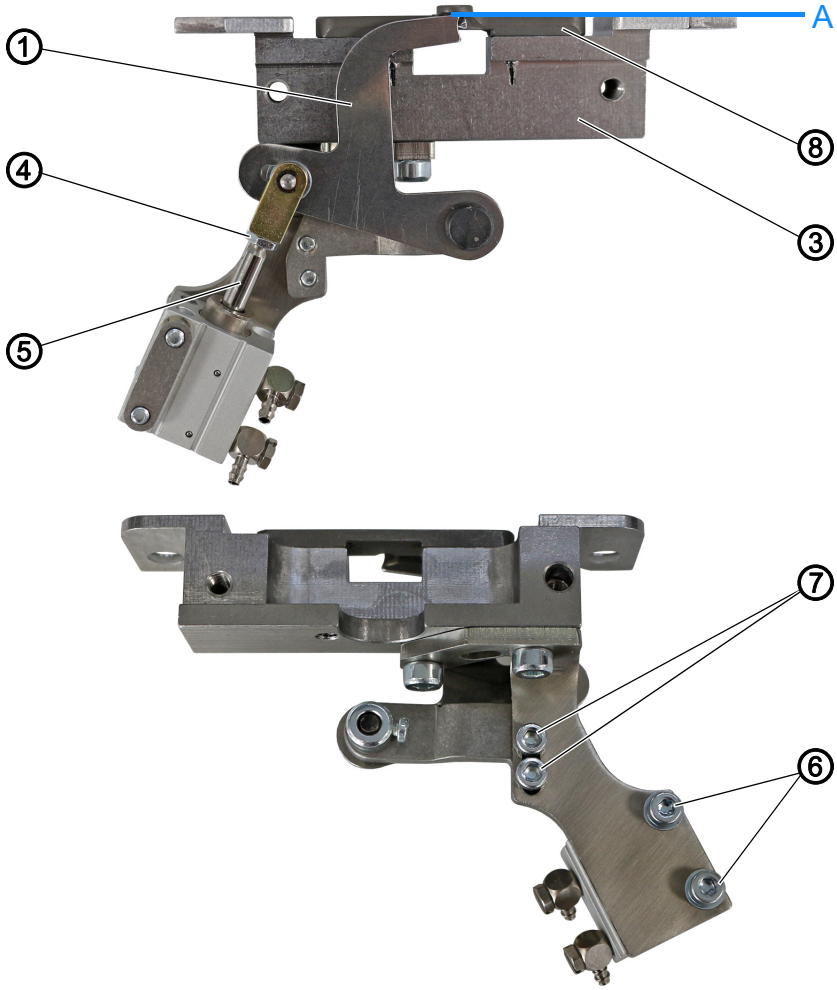

(1)	*- Stitch position optimization*	*(6)*	*- Screws*
(3)	*- Throat plate holder*	*(7)*	*- Screws*
(4)	*- Nut*	*(8)*	*- throat plate*
(5)	*- Piston*		

3. Mount throat plate (8) on throat plate holder (3).
4. Set stitch position optimization (1).
   - Adjust height using the screws (7)
   - Adjust the lateral position using the screws (6)
   - if necessary, loosen nut (4) to adjust the piston rod

   ↳ The gap **A** between stitch position optimization (1) and throat plate (8) should be as small as possible.
   The piston (5) should move smoothly on both sides and not strike the ends of the slotted hole.
5. Assemble the throat plate holder (3) with stitch position optimization (1) in the machine.

2.2 Assembling the magnet valve

2.2.1 Assembling the Bürkert magnet valve

Fig. 3: Assembling the magnet valve (1)

(1) - Magnet valve

To assemble the magnet valve:

1. Remove the blanking plates from the valve block.
2. Assemble the magnet valve (1).
   - **Class 906-10:** output **7**
   - **Class 911-210-10:** output **8**

Fig. 4: Assembling the magnet valve (2)

(2) - Hoses

3. Guide hoses (2) downwards between the rear hood of the machine head and the carrier of the transport system.
4. Secure hoses (2) with the cables ties to the existing cables and hoses and guide them forwards to the hook.
5. Assemble hoses (2) to the stitch position optimization.

2.2.2 Assembling the Festo magnet valve

Fig. 5: Assembling the magnet valve (1)

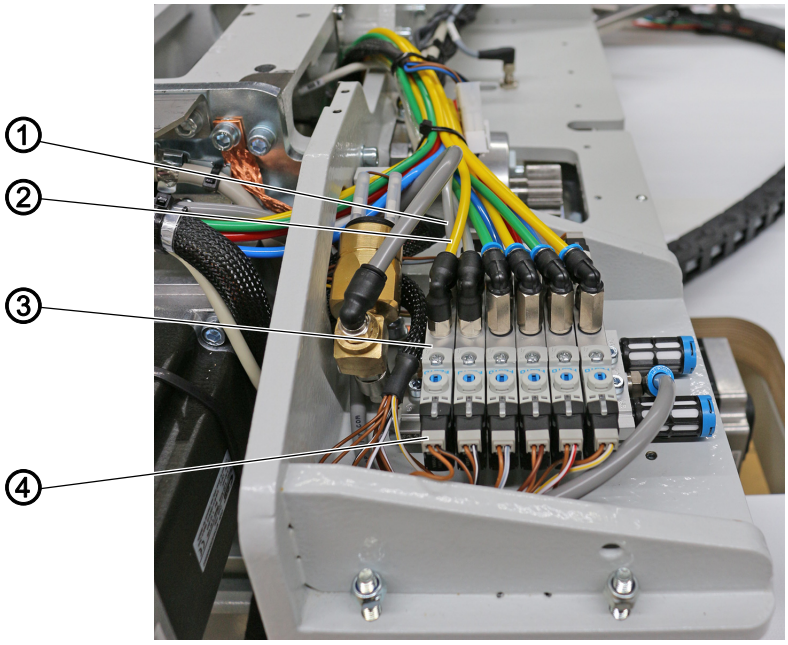

(1) - Hose
(2) - Hose
(3) - Magnet valve
(4) - Plug X458

To assemble the magnet valve:

1. Remove the blanking plate from the valve block.
2. Assemble the magnet valve (3).
   - **Class 906-10:** output **7**
   - **Class 911-210-10:** output **8**
3. Fix hoses (1) and (2) with cable ties to the existing cables and hoses and lead them forward to the hook.
4. Connect plug **X458** (4) to magnet valve (3).

Fig. 6: Assembling the magnet valve (2)

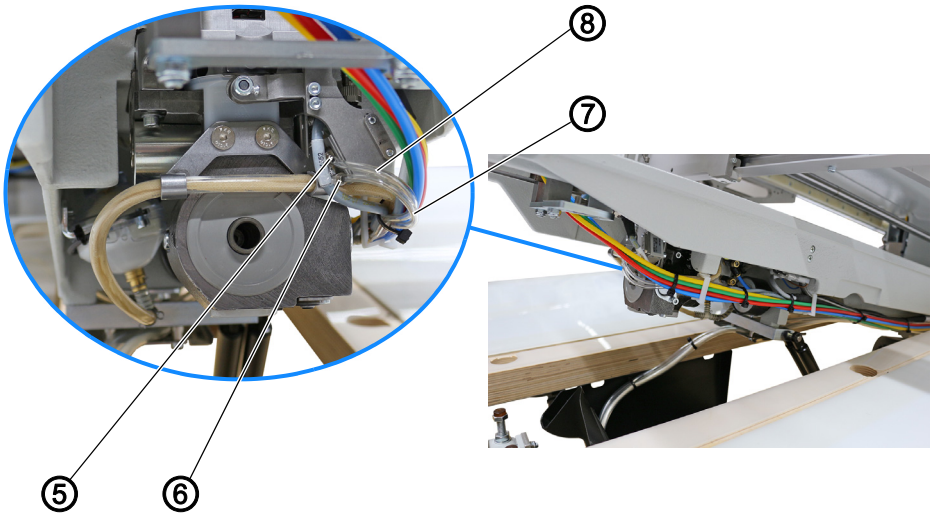

(1) - Hose
(2) - Hose
(5) - Upper connection
(6) - Lower connection
(7) - Hose
(8) - Hose

5. Connect grey hose (1) with transparent hose (8).
6. Connect yellow hose (2) with transparent hose (7).
7. Connect the hose (8) to the upper connection (5) on the stitch position optimization.
8. Connect the hose (7) to the lower connection (6) on the stitch direction optimisation.

2.3 Checking the stitch position optimization

Fig. 7: Checking the stitch position optimization

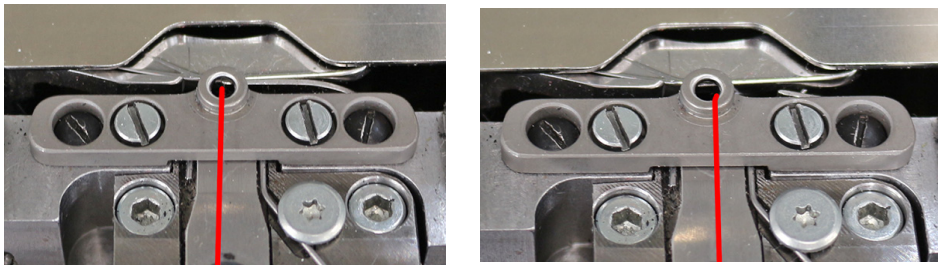

Stitch position optimization active

Stitch position optimization inactive

To check the stitch position optimization:

1. In the menu `Service > Multitest > Test outputs` activate the magnet valve.
   - **Class 906-10:** activate output **7**
   - **Class 911-210-10:** activate output **8**

↳ The hook thread is diverted to the left via the center of the stitch hole.

2.4 Programming the stitch position optimization

Fig. 8: Programming the stitch position optimization

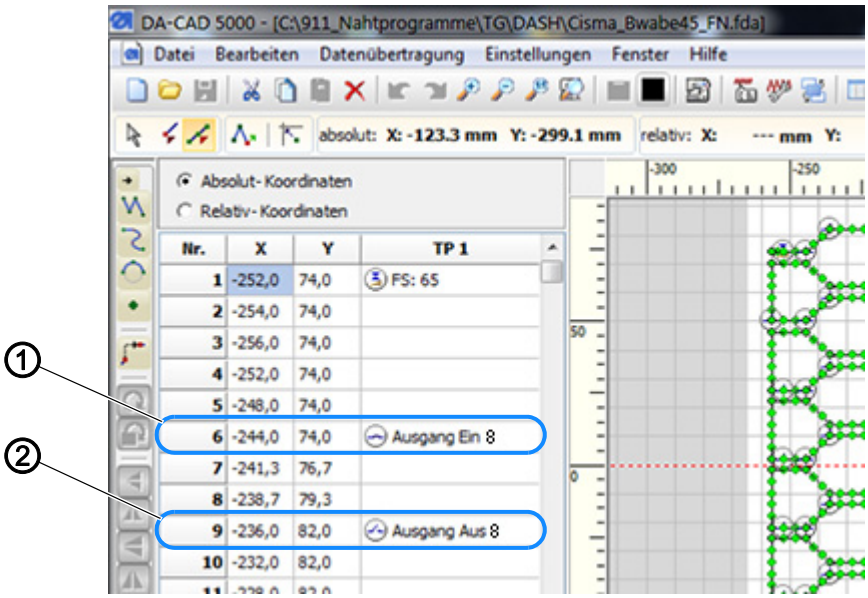

(1) - Stitch position optimization active *(2) - Stitch position optimization inactive*

To program the stitch position optimization:

1. Control stitch direction optimization via technology points in the sewing program (e.g. DA-CAD).

- **Class 906-10:**
  - Output **7** ON: Stitch position optimization active
  - Output **7** OFF: Stitch position optimization inactive
- **Class 911-210-10:**
  - Output **8** ON: Stitch position optimization active
  - Output **8** OFF: Stitch position optimization inactive

OR

1. Switch stitch direction optimization on or off via the contour adjustment on the control panel.

DÜRKOPP ADLER GmbH
Potsdamer Str. 190
33719 Bielefeld
Germany
Phone: +49 (0) 521 925 00
E-Mail: service@duerkopp-adler.com
www.duerkopp-adler.com

Subject to design changes - Part of the machines shown with additional equipment - Printed in Germany
© Dürkopp Adler GmbH - Additional Instructions - 0791 911715 EN - 01.0 - 11/2020