Instructions for service

4180 - 5

Minerva Boskovice, a.s., Sokolská 60, CZ - 680 17 Boskovice
Tel.: +420-501-453434, 453433, 494111 • Fax: +420-501-452165 • http://www.minerva-boskovice.com

Edition: 06/2001 Printed in Czech Republic **735 342 000 420**

CONTENTS:

1. General safety instructions 1

2. Introduction 1

3. Head of the sewing machine 2

3. 1 Hook and hook post 2

3.1.1 Description
3.1.2 Height setting of the hook
3.1.3 Setting the distance of the hook from the needle
3.1.4 Angular setting of the hook (timing)
3.1.5 Protection of the needle and of the hook point
3.1.6 Setting of the bobbin case opener
3.1.7 Setting the regulation of the hook lubrication
3.1.8 Replacement of the hook
3.1.9 Setting the gear
3.1.10 Dismantling of the hook post

3.2 Needle and thread mechanism 5

3.2.1 Description
3.2.2 To check the handwheel angular adjustment
3.2.3 Height setting of the needle bar
3.2.4 Angular setting of the pin of the thread mechanism
3.2.5 Side setting of the needle bar holder
3.2.6 Setting the needle (the needle bar holder) in the direction of sewing (fine setting)

3.3 Throat plate and its post 7

3.3.1 Description
3.3.2 Mounting and removing the throat plate and its insert
3.3.3 Setting the throat plate and its insert
3.3.4 Side setting of the throat plate post

3.4 Thread tensioners and limiter 8

3.4.1 Description
3.4.2 Setting the tension of main and auxiliary tensioners
3.4.3 Setting the tensioning mechanism of the main tensioner
3.4.4 Setting the adapting spring
3.4.5 Setting the thread limiter

3.5 Feeding mechanism of the needle feed and of the lower feed wheel 10

3.5.1 Description
3.5.2 Stitch length mechanism
3.5.2.1 Setting the upper eccentric
3.5.2.2 Setting the prop
3.5.2.3 a Forward and rearward stitch length distribution (rough)
3.5.2.3 b Forward and rearward stitch length distribution (fine)
3.5.2.4 Setting of the control knob (including the stitch length limitation)
3.5.3 Setting the needle feed (rough)
3.5.4 Lower feed wheel
3.5.4.1 Feeding clutches
3.5.4.1.1 Description
3.5.4.1.2 Setting the lever of the second step of feeding(angle, position)
3.5.4.1.3 Setting of the lower eccentric
3.5.4.1.4 Setting the engagement and disengagement of the clutches
3.5.4.2 Wheel feeder and its post
3.5.4.2.1 Setting the chain wheel
3.5.4.2.2 Height setting of the feeder and tensioning of the chain
3.5.4.2.3 Replacement of the feeder
3.5.5 Setting the top roller (pressing force, height)

3.6 Feeding mechanism of the top roller 15

3.6.1 Description
3.6.2 Side setting of the indented lower pulley
3.6.3 Side setting of the indented upper pulley
3.6.4 Setting the tensioning roller
3.6.5 Replacement of the indented belt

3.6.6 Setting the feeding difference
3.6.7 Replacement of the friction wheels of the drive conversion unit
3.6.8 Top roller
3.6.8.1 Selection of the top roller diameter
3.6.8.2 Forward, rearward and side setting
3.6.8.3 Setting the gear clearance
3.6.8.4 Replacement of the top roller

3.7 Setting the presser foot lift 19

3.8 Bobbin winder 20
3.8.1 Description
3.8.2 Setting the bobbin winder stop
3.8.3 Setting the friction gear

3.9 Safety clutch 21
3.9.1 Description
3.9.2 Setting the disengaging moment

3.10 Indented belt transmission 21
3.10.1 Setting the tensioning roller of the indented belt
3.10.2 Replacing the indented belt

3.11 V-belt, motor - head 22
3.11.1 Tensioning
3.11.2 Replacing the V-Belt

3.12 Driving toothed belt 22
3.12.1 To exchange the driving toothed belt

3.13 Lubrication 23
3.13.1 Description
3.13.2 Refilling oil
3.13.3 Multiple oil use

4. Thread trimming 24
4.1 Description of the trimming mechanism
4.2 Setting the pickup roller
4.3 Setting the cam
4.4 Setting the fork
4.5 Setting the moving knife
4.6 Setting the fixed knife
4.7 Setting the retaining spring of the hook thread
4.8 Setting switching of the electromagnets

5. Lifting the top roller by electromagnet 26
5.1 Description
5.2 Setting the electromagnet pin
5.3 Setting the electromagnet current
5.4 Assembly of the top roller lifting electromagnet

6. Backtacking using electromagnet 27
6.1 Description
6.2 Electromagnet height setting
6.3 Setting the position of push-buttons
6.4 Change of the function of push-buttons

7. Connecting the electric elements on the machine head 28

8. Drive, control panel, position sensor 28

9. Lighting 28
9.1 Mounting on the machine head
9.2 Lamp replacement

10. Maintenance (table of operations) 29

11. Setting the machine according to the sewing category 29
11.1 Introduction
11.2 Table of setting the machine according to the sewing category

1. General safety instructions

The non-observance of the following safety instructions can cause bodily injuries or damages to the machine.

1. The machine must only be commissioned of the instruction book and operated by persons with appropriate training.
2. Before putting into service also read the safety rules and instructions of the motor supplier.
3. The machine must be used only for the purpose intended. Use of the machine without the safety devices is not permitted. Observe all the relevant safety regulations.
4. When gauge parts are exchanged (e.g. needle, top roller, needle plate, feed dog and bobbin) when treading, when the workplace is left, and during service work, the machine must be disconnected from the mains by switching off the master switch or disconnecting the mains plug.
5. Daily servicing work must be carried out only by appropriately trained persons.
6. Repairs, conversion and special maintenance work must only be carried out by technicians or persons with appropriate training.
7. For service or repair work on pneumatic systems the machine must be disconnected from the compressed air supply system. Exceptions to this are only adjustments and functions checks made by appropriately trained technicians.
8. Work on the electrical equipment must be carried out only by electricians or appropriately trained persons.
9. Work on parts and systems under electric current is not permitted, except as specified in regulations DIN VDE 0105.
10. Conversion or changes to the machine must be authorized by us and made only in adherence to all safety regulations.
11. For repairs, only replacement parts approved by us must be used.
12. Commissioning of the sewing head is prohibited until such time as the entire sewing unit is found to comply with EC directives.

It is absolutely necessary to respect the safety instructions marked by these signs.
Danger of bodily injuries !
Please note also the general safety instructions.

IMPORTANT WARNING

In spite of all safety measures made on the machines, inappropriate actions of the operator may lead to dangerous situations. In industrial sewing machines Minerva, attention should be paid to the following still remaining possible sources of injury:

1. Moving sewing needle
   - risk of injury when sewing with raised pressure foot or top roller, because the finger guard is then positioned too high.
2. Moving thread take-up lever
   - risk of injury when inadvertently or intentionally inserting the finger(s) between the thread take-up lever and its guard.
3. Moving pressure member
   - risk of injury when holding sewn work in immediate vicinity of the pressure member and beginning to insert under the pressure member a considerably thicker sewn work portion,
   - risk of injury when sinking the pressure member.
4. When switched off, the clutch motor slows down by inertia but would be reactivated by an accidental treading down of the motor treadle. To avoid such risk, it is advised to hold the handwheel by hand and slightly to depress the motor treadle.

2. Introduction

This service book contains instruction for regulating the mechanisms of the sewing machine head.

The instructions for use and for putting the machine into operation and for the control of the stopmotor are not included in this service book, but they are supplied as separate publications.

This service book is universal for all subclasses of the machine - it contains setting procedures for all elements which may be placed on the machine of the given class. When the supplied subclass of this machine does not include some element, then it is possible to leave out the respective parts of the instructions. The optional equipments of the machine and the respective configurations of the subclasses of the machine are given in the operating instructions.

This sewing machine disposes of a large extent of its use. The machine should be set with respect to the parameters of the sewn material, the sewing thread etc. The setting for the individual categories is given in the chapter 11.2.

For setting the machine, simple setting aids are used which are included in the accessory of the machine. Besides these aids, universal measuring devices are used, such as slide calliper, feeler gauges and dynamometer for measuring the thread tension.

3. Head of the sewing machine

3.1 Hook and the hook post

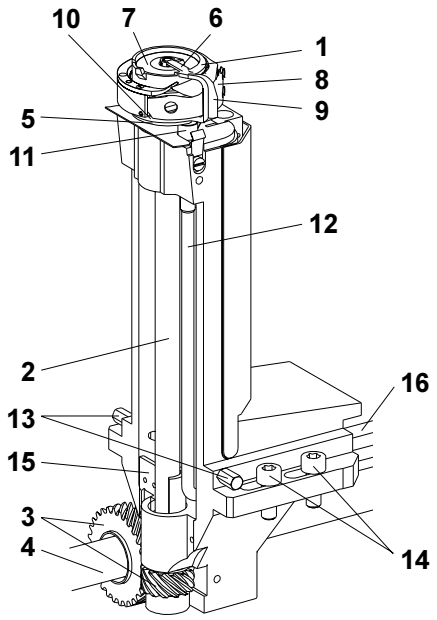

3.1.1 Description

The hook (1) is mounted on the shaft (2) and is driven by the gear (3) from the shaft (4).
The shaft of the hook (2) is mounted on the top in a sliding bearing and, on the bottom, in a needle bearing.
The hook is provided with a lever (6) which is tilted when removing the bobbin (7). The protecting sheet (8) protects against the collision of the needle with the hook point. The bobbin case opener (9) is driven by the eccentric (10) on the shaft (2).
The lubricating tube (11), on which a lubricating wick is fastened in the tube (12), feeds oil for lubricating the sliding bearing (5) of the eccentric (10) and the hook path.
The screws (13) serve for taking up the clearance of the gear. The screws (14) fasten the post to the bedplate.
The lubricating felt (15) is connected by the wick (16) with the main lubricating system and serves for lubricating the gear (3).

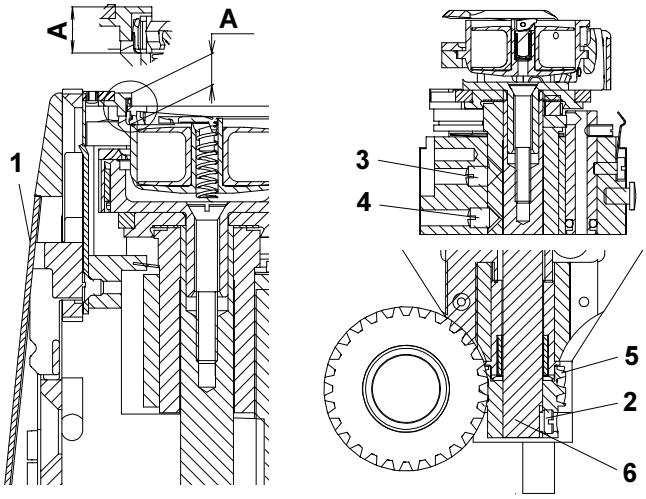

3.1.2 Height setting of the hook

The designated distance „A“ should be 6.1 mm.

Caution! Danger of injury!
Switch off the main switch ! Before starting the setting operation, wait until the motor stops!

- Remove the guard (1).
- Loosen both screws (2).
- By turning the screws (3 and 4), set the required distance„A“. After having set it, tighten carefully the screws.
- By axial shifting of the gear wheel (5), set the axial clearance in such a way that this clearance is the least possible, but sufficient for turning easily the hook.
- Tighten carefully the screws (2). Caution ! One of these screws must bear on the flat of the shaft 6).

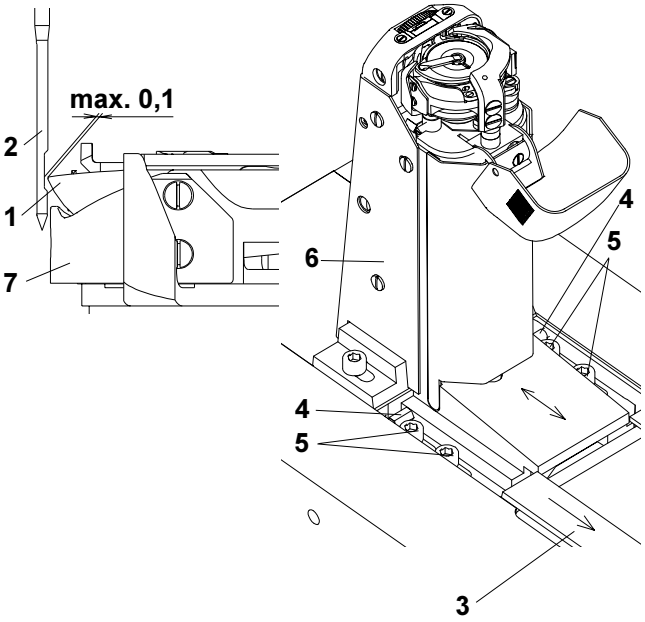

3.1.3 Setting the distance of the hook from the needle

The hook point (1) is set up to the maximum distance of 0.1 mm from the bottom of the needle recess (2). For the sewing categories 1 and 2, the needle size 100 is set, for the sewing categories 3 and 4, it is the needle size 160.

Caution! Danger of injury!
Switch off the main switch ! Before starting the setting operation, wait until the motor stops!

- Shift the plate (3).
- Loosen only one screw (4).
- Loosen the screws (5) and tighten them only slightly.
- Shift the hook post (6) at the determined distance between the needle and the hook point.
- Tighten carefully the screw (4) (be sure not to damage the threads!)
- Tighten duly the screws (5).
- Check up the setting using a narrow strip of thin paper and proceed to the eventual correction of setting.

Caution!
When changing substantially the sewing category, the protecting sheet of the hook (7) should be set up.

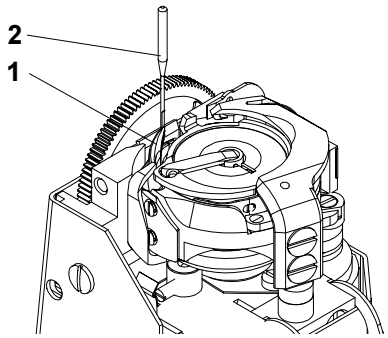

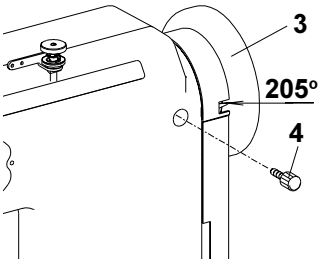

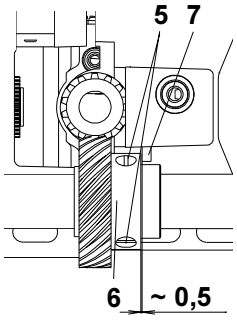

3.1.4 Angular setting of the hook (timing)

The hook is to be angularly set in such a way that the hook point (1) is opposite the needle at the moment, when the needle shifts by 2.5 mm from its bottom dead center. This corresponds to the 205° on the scale of the handwheel (3).

Caution! Danger of injury!
Switch off the main switch! Before starting the setting operation, wait until the motor stops!

- Remove the throat plate.
- Turn the handwheel (3) to the 205° and fix it with the screw (4) which is component part ot the accessory of the machine (tighten it carefully).
- Loosen the screws (5).
- Turn the hook into the required position.
- Set up the distance of about 0,5 mm between the gear wheel (6) and the pin (7).
- Tighten to the maximum the screws (5).

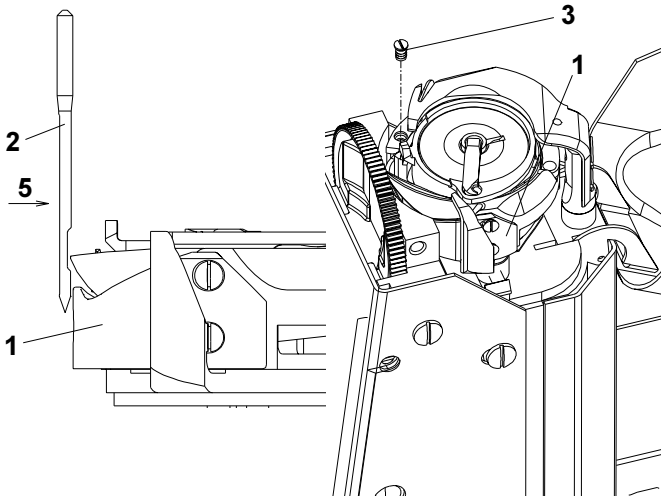

3.1.5 Protection of the needle and of the hook point

The protecting sheet (1) is to be set up in such a way that the clearance between the protecting sheet and the needle (2) is the least possible.

Caution ! Danger of injury!
Switch off the main switch! Before starting the setting operation, wait until the motor stops!

- Remove the throat plate and the movable trimming knife.
- Unscrew the screw (3).
- Put the screwdriver into the hole of the screw (3) and, using the regulating screw, set up the required clearance between the needle (2) and the protecting sheet (1). When turning to the right, the protecting sheet shifts out from the groowe and inversely.
- Check up the protecting effect in pushing against the needle in the sense of the arrow (5). The hook point must not catch the needle. If so, set up the protecting effect, correct eventually the setting of the distance of the hook point from the needle according to the paragraph 3.1.3.
- Screw in the screw (3).

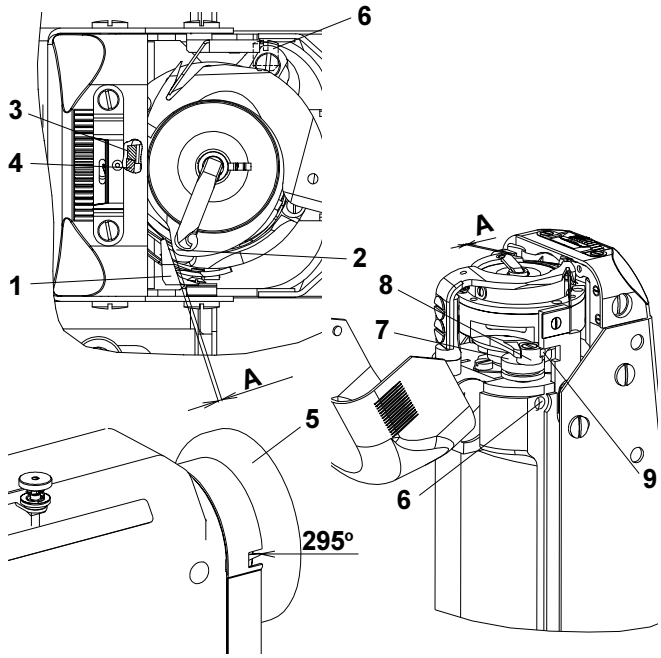

3.1.6 Setting of the bobbin case opener

The bobbin case opener (1) is to be set in such a way that, at the moment when the opener is in its dead centre, there would be a clearance „A“ between the opener (1) and the projection (2), whereas the finger (3) bears on the projection (4), „A“ = 0.7 mm for the sewing category 1 and 2, „A“ = 0.3 mm for the sewing category 3 and 4.

Caution ! Danger of injury!
Switch off the main switch! Before starting the setting operation, wait until the motor stops!

- Remove the sheet guard of the hook post.
- On the handwheel (5), set the angle of 295° (the hook is in its dead centre).
- Loosen the screw (6).
- Turn the eccentric (7) in such a way that the required clearance between the elements (1) and (2) is attained.
- Set the height of the eccentric (7) in such a way that it is in its highest position in retaining the minimum clearance between the slide (8) and the fork (9).
- Tighten duly the screw (6).

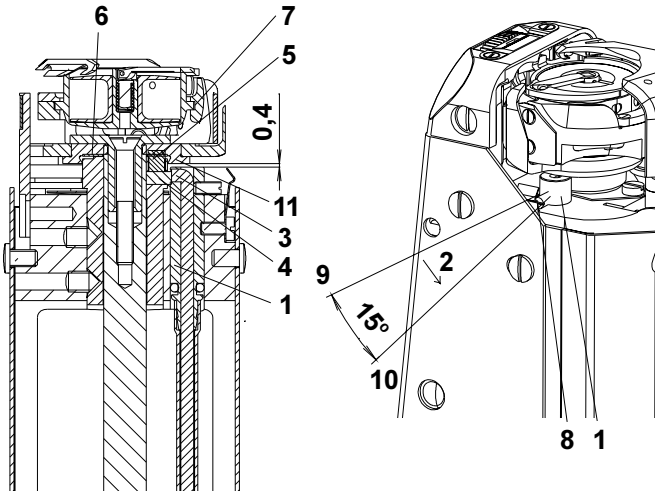

3.1.7 Setting the regulation of the hook lubrication

By turning the lubricating tube (1) in the sense of the arrow (2), the size of the contacting surface between the wick (3) and the felt insert (4) is regulated. In this way, the speed of the capillary lift of oil into the felt insert (5) is influenced, from which oil is wiped on the surface (6) and is driven by centrifugal force into the hook path (7).

Setting of full lubrication

- Turn the screw (8) into the position (9).

Setting of limited lubrication

- Turn the screw (8) into the position (10).

After having ended the regulation, set the height of the lubricating tube (1) at 0.4 mm from the eccentric (11).

3.1.8 Replacement of the hook

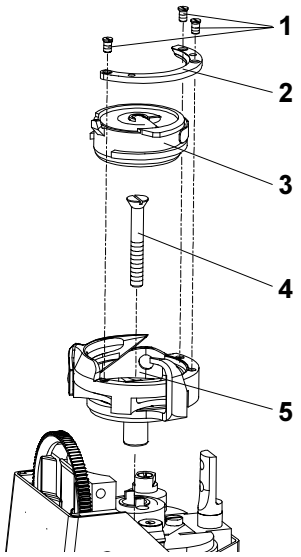

Caution! Danger of injury!
Switch off the main switch ! Before starting the setting operation, weit until the motor stops!

- Remove the throat plate and the trimming knife.
- Unscrew the screws (1) and remove the gib (2).
- After having suitably turned a bit the hook, remove the bobbin case (3).
- Unscrew thorougly the screw (4).
- Remove the body of the hook (5) upwards.
- When mounting, the procedure is inverse.

3.1.9 Setting the gear

The mutual angular orientation of the gear wheel (1) relative to the gear wheel (2) should ensure the accessibility of the screw (5) at the moment when the hook point comes to lie opposite the needle (4). The wheel (2) is to be set with its gear rim symmetrically to the centre of the gear wheel (1). The clearance between the gear wheels is to be the least possible.

Caution ! Danger of injury!
Switch off the main switch! Before starting the setting operation, wait until the motor stops!

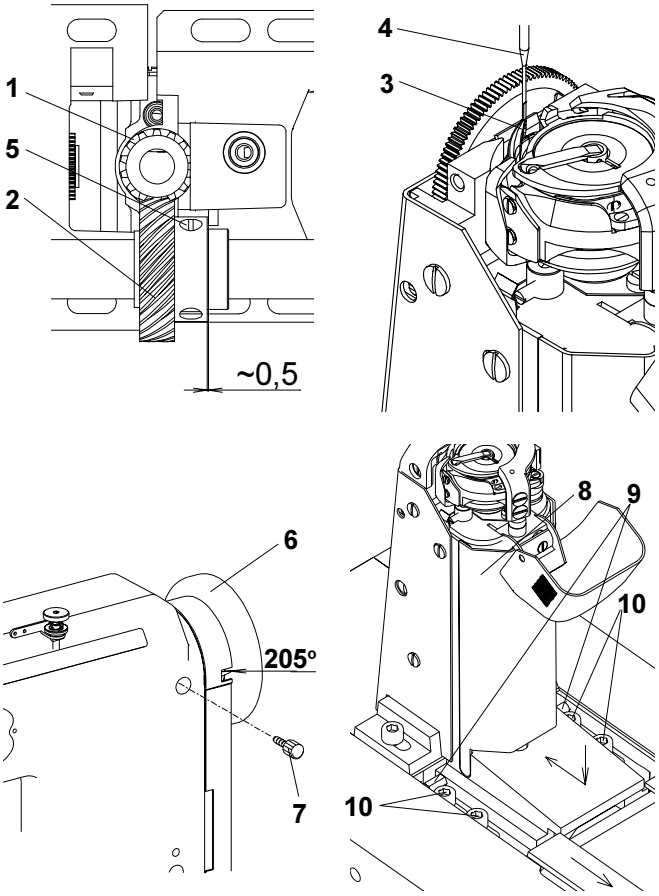

- Set the angle of 205° on the handwheel (6) and lock it with the screw (7).
- On the removed post of the hook (8), according to the paragraph 3.1.10, the hook point (3) is to be turned a bit according to the illustration.
- Turn the gear wheel (2) into the suitable position and insert the post of the hook into the machine according to the respective arrows. Check up, whether the screw (5) is accessible and, if not, repeat the procedure.
- Set the the distance of the hook from the needle according to the paragraph 3.1.3.
- Set the precise angular displacement of the hook according to the paragraph 3.1.4.
- Loosen the screw (10) and tighten them slightly.
- Set the clearence in the gear in turning the screws (9). Check up, whether the gear has a clearance during the whole revolution of the hook. Turn the handwheel step by step by 15° and, with each step, grasp the hook and try, if there is an angular dead travel. Tighten carefully the screws (9).
- Tighten duly the screws (10) and try anew the clearance of the gear.

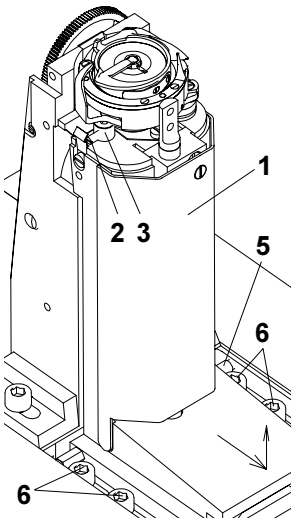

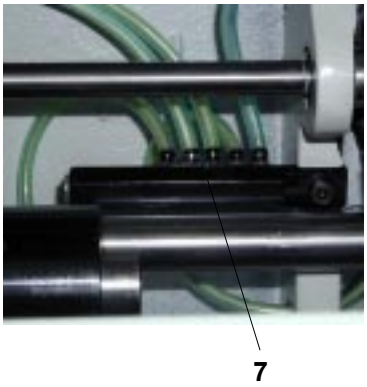

3.1.10 Dismantling of the hook post

When dismantling the post (1), the supplies of lubricating oil are to be disconnected first, the fastening screws unscrewed and, thereafter, the post is removed.

Caution ! Danger of injury!
Switch off the main switch! Before starting the setting operation, wait until the motor stops!

- Unscrew the screw (2).
- Push the lubricating tube (3) downwards into the post.
- Disconnect the hose (4) with the wick.
- Loosen only one screw (5).
- Unscrew the screws (6).
- Shift the post in the sense of the arrows and remove it out from the machine.
- When mounting it, proceed inversely. Make sure that the wicks in the tubes are in contact with the other wicks leading oil into the box (7).

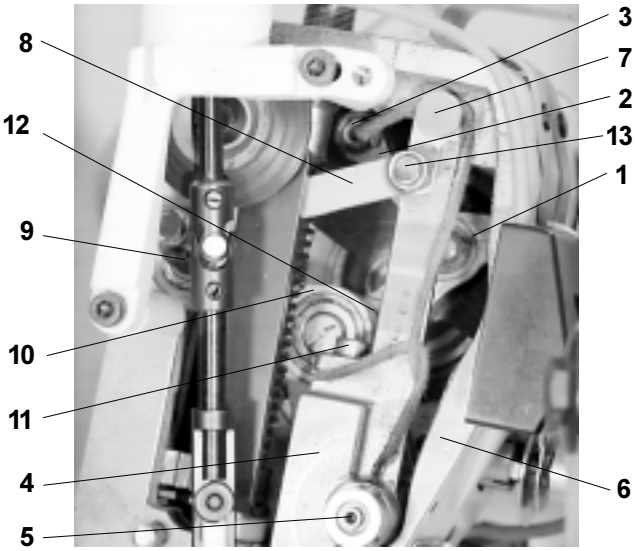

3.2 Needle and thread mechanism

3.2.1 Description

The take-up lever (1) is mounted in ball bearings, both at the spot of its suspending on the connecting rod (2) and in the mounting on the loop (12). The take-up lever is of aluminum and is provided with a stuck-in eye for two threads. The connecting rod (2) is mounted on the eccentric pin (3), by means of which the thread mechanism is adjusted for a big or a small hook. The needle rod holder (4) is mounted through the pivot (5) in a rotating way in the arm (6). In its top part, the holder is guided by the guide pin (7). The movement for the needle feed is given to it by the connecting rod (8) driven by the feeding shaft (9). The connecting rod (8) is mounted by eccentric pin (13) with needle bar holder (4).
The connecting rod (10) of the needle bar (11) on the loop (12) is mounted in a ball bearing and it is slidingly mounted on the needle bar carrier. The mechanism is lubricated by means of a central-wick lubricating system.

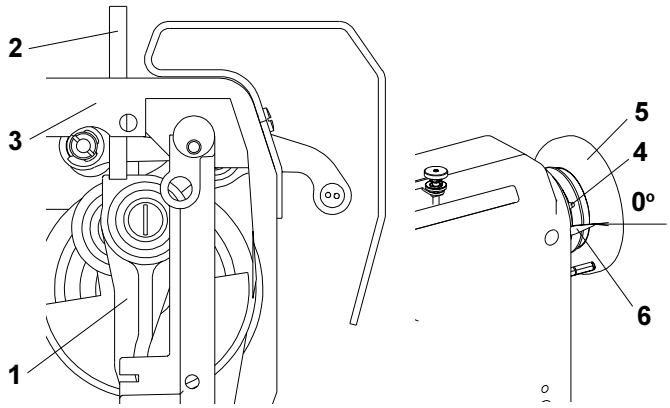

3.2.2 To check the handwheel angular adjustment

The handwheel (5) must be situated in its precise position relative to the needle and thread mechanism. This position is given by a pin (2), which locks the connecting rod of the needle rod (1) through a hole in the arm (3). In this position, the indicator (6) of the handwheel must show „0“. The position is fixed by the handwheel screw (4) contacting a small flat surface provided on the upper shaft.
The correct adjustment of the angular position has been carried out at the producer‘s.

Caution ! Danger of injury!
Switch off the main switch! Before starting the setting operation, wait until the motor stops!

3.2.3 Height setting of the needle bar

At the moment, when the hook point passes around the needle, the upper edge of the needle eye must be about 1 mm below the hook point. In an opposite case, it is necessary to set the height of the needle bar as follows:

Caution ! Danger of injury!
Switch off the main switch! Before starting the setting operation, wait until the motor stops!

- Remove the front guard.
- Loosen the screw (1) of the needle bar carrier
- Set the correct height of the needle bar and tighten anew the screw (1).

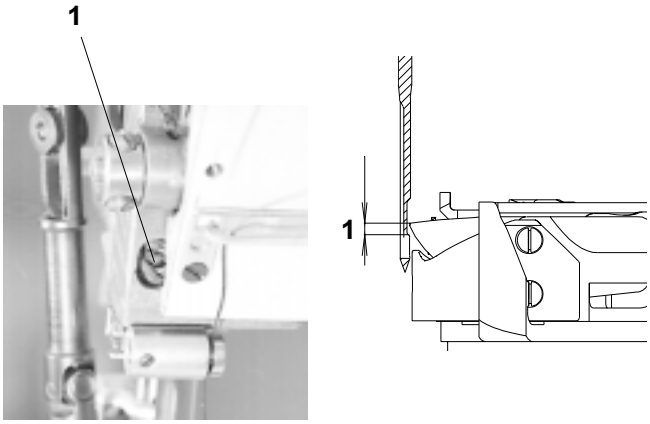

Caution !
An incorrect setting of the needle bar height may cause the striking of the hook point against the needle.

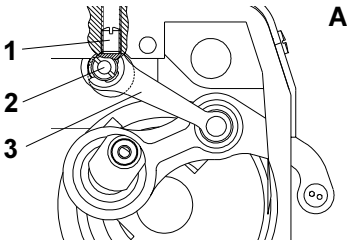

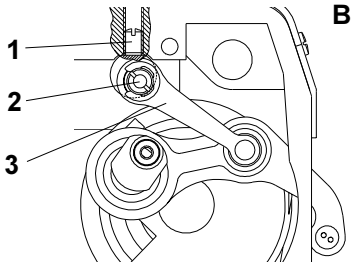

3.2.4 Angular setting the pin of the thread mechanism

The hinged pin (2) of the connecting rod (3) can be set in two positions:

- for a small hook, in position „A“ (eccentricity in the sense from the main shaft)
- for a big hook, in position „B“ (eccentricity in the sense towards the main shaft).

Set the connecting rod pin as follows:

Caution! Danger of injury!
Switch off the main switch! Before starting the setting operation, wait until the motor stops!

- Remove the front guard.
- Loosen the screw (1) of the connecting rod (3) pin (2).
- Set the pin into the corresponding position and tighten anew the screw.
- The correct position is given by the flat on the pin (2), on which the screw (1) is tightened.

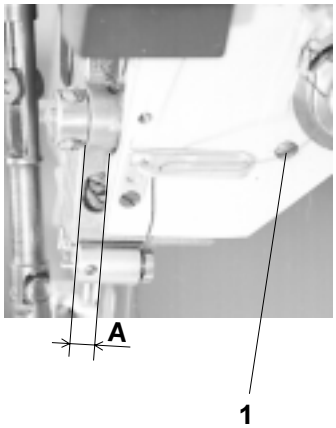

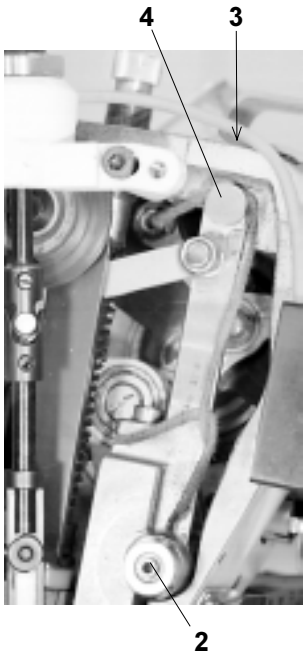

3.2.5 Side setting of the needle bar holder

The correct position of this holder is in such case, when the needle bar is lined up with the presser-foot bar. The needle bar holder can be set as follows:

Caution! Danger of injury!
Switch off the main switch! Before starting the setting operation, wait until the motor stops!

- Loosen the screw (1) of the pin (2).
- Loosen the screw (3) of the guide pin (4).
- In shifting the pin (2) set the needle bar holder on the measure „A“ = 7.5 mm (distance of the front faces of the arm and of the needle bar holder) /at the same time the pin (4) shifts/.
- The guide pin (4) is to be set in such a way that the needle bar holder moves easily.
- Tighten the screws (1 and 3).

3.2.6 Setting the needle (the needle bar holder) in the direction of sewing (fine setting)

When shifting out the needle from the throat plate insert, at the moment, when the needle eye is at the level of the top surface of the throat plate insert, the distance between the needle and the wall of the throat plate insert must be „A“ = 0.2 mm.

Caution ! Danger of injury!
Switch off the main switch! Before starting the setting operation, wait until the motor stops!

- Shift the insert (4) up to the stop in the sense of the arrow.
- Set the maximum allowed stitch length.
- Set the handwheel to the angle of 244˚.
- Loosen the screw (3) of the eccentric of the needle bar holder.
- By turning the eccentric (6), set the required distance „A" = 0.2 mm.
- Tighten up the screw (3) and check up the setting.

Caution!
A faulty setting may cause bending or breaking of needles against the throat plate insert.

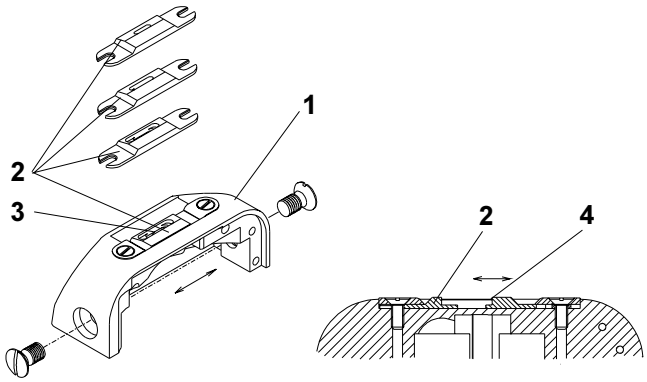

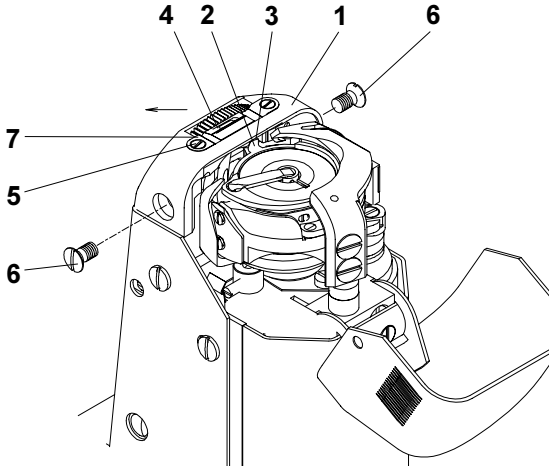

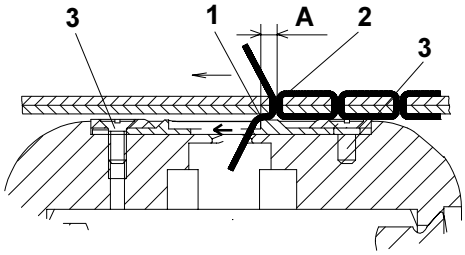

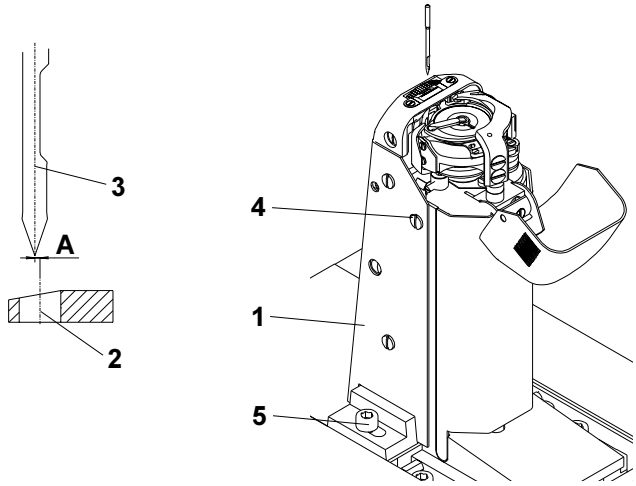

3.3 Throat plate and its post

3.3.1 Description

The throat plate (1) is universal for all categories of sewing. In the throat plate there is mounted an exchangeable insert (2). The machine is supplied with several types of inserts differing in the width of their needle aperture (3), see tab. in the par. 11.2).

For ensuring a good function of the thread trimming device, the insert can be set in various positions in the sense of arrows in such a way that the rear edge of the hole in the throat plate (4) prevents unthreading the thread from the sewn material when forming the first stitches at the beginning of the seam.

3.3.2 Mounting and removing the throat plate and its insert

When mounting the throat plate (1), the finger (2) must engage into the recess (3). To remove the throat plate insert (4), screw out the screw (5), take out the washer (7, loosen the screw (8) and remove the insert (4) by oblique upward movement shown by the arrow.

Caution! Danger of injury!
Switch off the main switch! Before starting the setting operation, wait until the motor stops!

- Turn the finger (2) in the sense towards the throat plate (1).
- Mount the throat plate (1).
- Screw in the screws (6).
- Slide in the insert under the washer (9)in the oblique rearward sense (4).
- Mount the insert (7) and screw in the screw (5).
- Tighten the screw (8).
- When removing the insert, proceed in an inverse sequence.

3.3.3 Setting the throat plate and its insert

The insert of the throat plate should be set in the machines with the trimming device in such a way that the edge (1) is at the distance „A“ = 1 to 2 mm before the spot of interlacing of the threads (2). For the stitches up to the length of 2/3 of the maximum length, the insert is to be set in its extreme front position in the sense of the arrow. For long stitches, it should be in its extreme rear position, against the sense of the arrow. With the machines without the trimming device, the insert is in its extreme rear position.

Caution! Danger of injury!
Switch off the main switch! Before starting the setting operation, wait until the motor stops!

- Loosen the screws (3).
- By applying a heavy pressure of the screwdriver, shift the insert in its required position.
- Tighten the screws (3).

3.3.4 Side setting of the throat plate post

The post of the throat plate (1) is to be side set in such a way that the axis of the hole in the insert of the throat plate (2) is at the distance „A“ = 0.1 mm to the right from the axis of the needle (3).

Caution! Danger of injury!
Switch off the main switch! Before starting the setting operation, wait until the motor stops!

- Loosen the screws (4 and 5) (from the rear side of the post as well).
- Shift the post (1) in the sense required for attaining the distance „A“ = 0.1 mm.
- Tighten the screws (4 and 5) and check up for the correct setting.

3.4 Thread tensioners and limiter

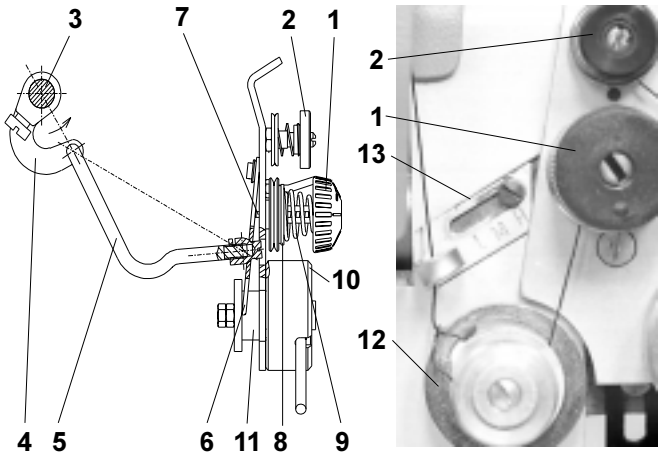

3.4.1 Description

The main tensioner (1) serves for creating the tension of the threads when tightening the stitch. The auxiliary tensioner (2) reduces the risk of pulling out of the thread after the thread trimming when removing the sewn material, when the thread is passed through this material and when the main tensioner is relieved. The main tensioner is relieved by the mechanism controlled by the shaft of the presser foot lifting (3), on which the lever (4), is mounted which shifts the prop (5), which pushes the metal sheet lever (6). This lever shifts the pin (7) and this pin pushes onto the washer (8) and relieves the spring (9).
With the machines provided with a thread trimming device, the main tensioner (1) is relieved as well when switching on the electromagnet (10), when its armature (11) pushes against the lever (6). The mechanism of the adapting spring (12) maintains the thread in its tensioned state when passing through the hook. The thread limiter (13) limits the length of the thread fed by the take-up lever when moving from the upper to the bottom dead centre to get a controlled passing of the thread through the hook.

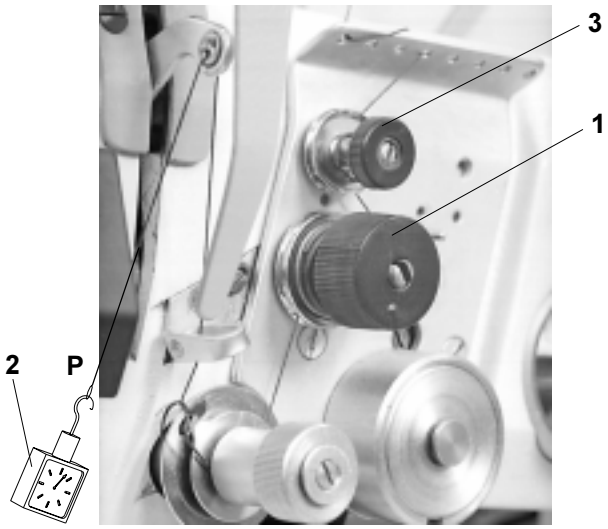

3.4.2 Setting the tension of the main and auxiliary tensioners

The tension of the main thread tensioner is regulated by means of the nut (1). The force of tensioning the thread is measured by the dynamometer (2) as it is shown on the illustration. The size of this force differs according to the category of sewing and is indicated in the par. 11.2.
The tension of the auxiliary tensioner is regulated using the nut (3). It should be the least possible, but sufficient for unthreading the thread from the sewn material when removing the sewn material from the pressing element without leaving the tensioner.

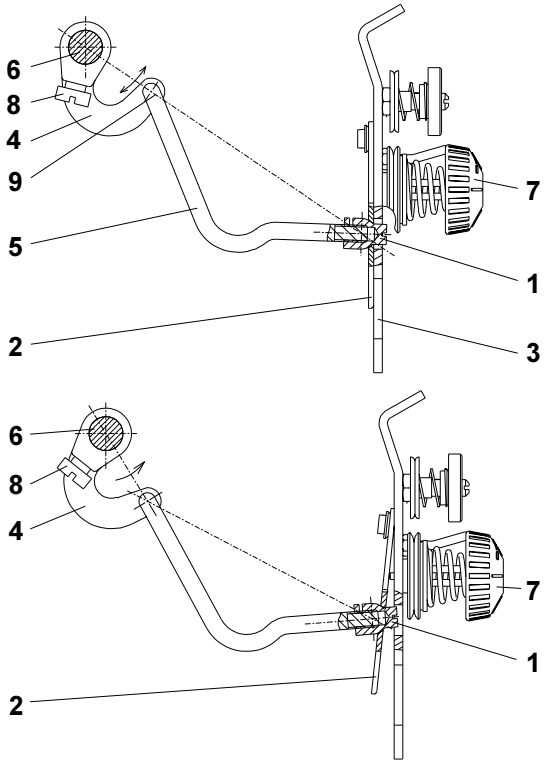

3.4.3 Setting the tensioning mechanism of the main tensioner

The nut (1) must be screwed off in such a way that the metal sheet lever (2) bears on the plate (3) and, at the same time, the lever (4) is not limited by the prop (5) in its rotation. The lever (4) must be fixed against the shaft (6) in such a way that, when the presser foot is in its lowest position, the nut (1) bears on the metal sheet lever (2) with its minimum clearance.

Caution ! Danger of injury!
Switch off the main switch! Before starting the setting operation, wait until the motor stops!

- Unscrew thoroughly the nut (7) and loosen the screw (8).
- Put in one line the axis of the shaft (6), the axis (9) and the axis of the spherical surface of the nut (1).
- Unscrew the nut (1), until the metal sheet lever (2) strikes against the plate (3). However, the lever (4) must rotate freely in the sense of the arrows in both senses.
- Screw in the nut (7) almost to the stop.
- Remove the sewn material and lower the presser foot.
- Turn the lever (4) in the sense of the arrow up to the stop.
- Return the lever (4) a bit back and tighten the screw (8).

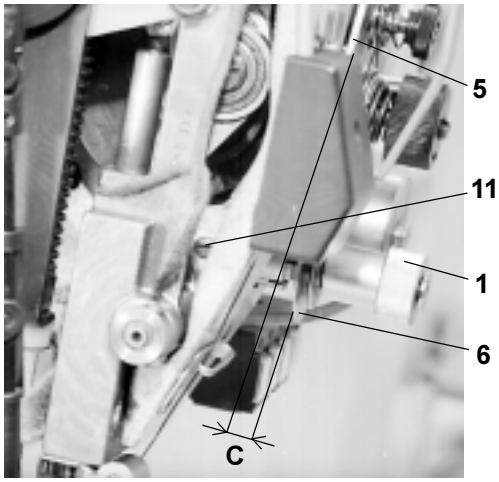

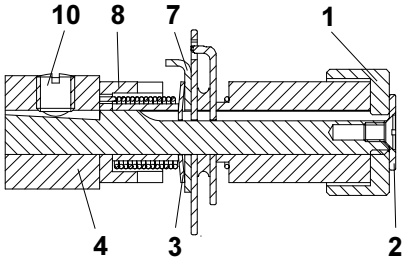

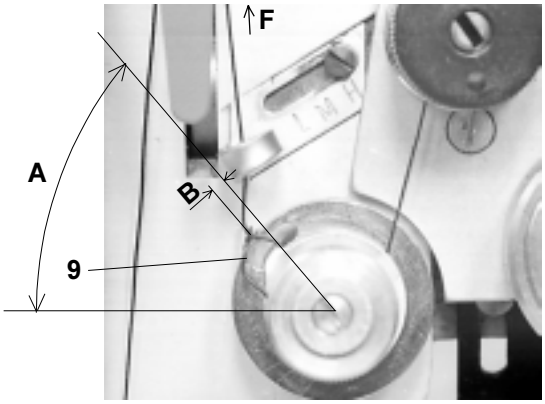

3.4.4 Setting the adapting spring

The mechanism of the adapting spring is to be set up in such a way that, when uscrewing the nut (1) up to the stop to the washer (2), the conical spring (3) remains under the tension which is set by shifting the adjusting ring (4) locked by the screw (10).
The angular setting thereof is to be done in such a way that the angle „A“ = 45°. The axial setting is to be done in such a way that the plate (5) and the plate (6) are at the mutual distance equal to the measure „C“= 3 mm.
The washer (7) is to be oriented in such a way that the distance „B“ = 1 to 1.5 mm. The bushing (8) is to be oriented in such a way that the adapting spring (9) is tensed up by 90° from the free state.

Caution! Danger of injury!
Switch off the main switch! Before starting the setting operation, wait until the motor stops!

- Unscrew the nut (1) up to the stop towards the washer (2).
- Loosen the screw (10), push heavily the ring (4) against the washer (2) and tighten the screw (10).
- Mount the mechanism of the adapting spring into the machine in such a way, so that the pieces (5 and 6) are at the distance „C“ = 3 mm, set the angle „A“ = 45° and tighten the screw (11).
- Turn the washer with the nose (7) in such a way that the distance „B“ = 3 mm is attained.
- Put the screwdriver into the slit in the bushing (8) and turn it in counterclockwise direction, until the spring (9) touches slightly the nose of the washer (7). Turn then still the bushing (8) by 1/4 revolution.
- Tighten the nut (1). In this way, the whole mechanism immobilizes.

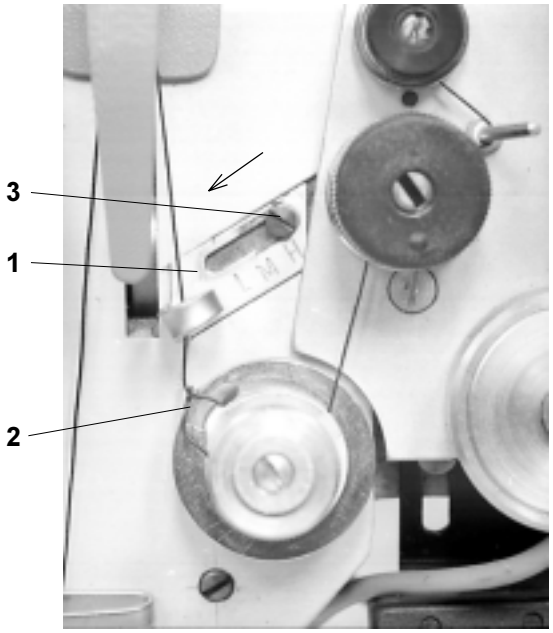

3.4.5 Setting the thread limiter

The thread limiter is to be set in such a way that, when sewing and passing the thread through the most distant point of the hook, the spring (2) shifts by about 1/4 to 3/4 length of its total length. This means that the thicker will be the sewn material and the longer will be the stitch length, the more will be the limiter shifted in the sense of the arrow and inversely. Under standard sewing conditions, the thread limiter is set in its tested positions depending on the sewing category in accordance with the chapter 11.

Caution! Danger of injury!
Switch off the main switch! Before starting the setting operation, wait until the motor stops!

- Tighten the screw (3).
- Set the thread limiter (1) in such a way that the screw (3) is situated above some letter according to the chapter 11.
- Tighten the screw (3).

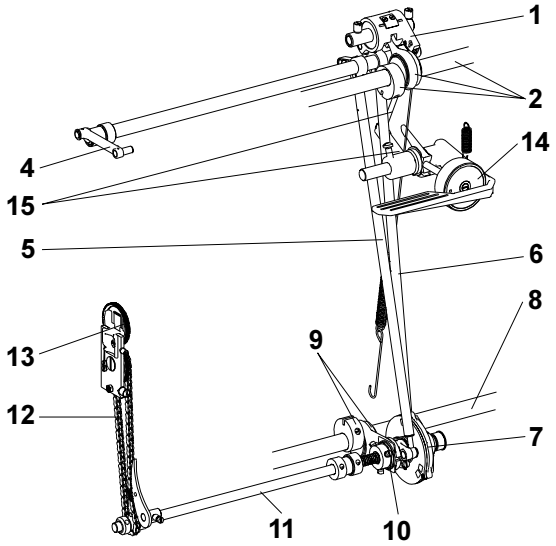

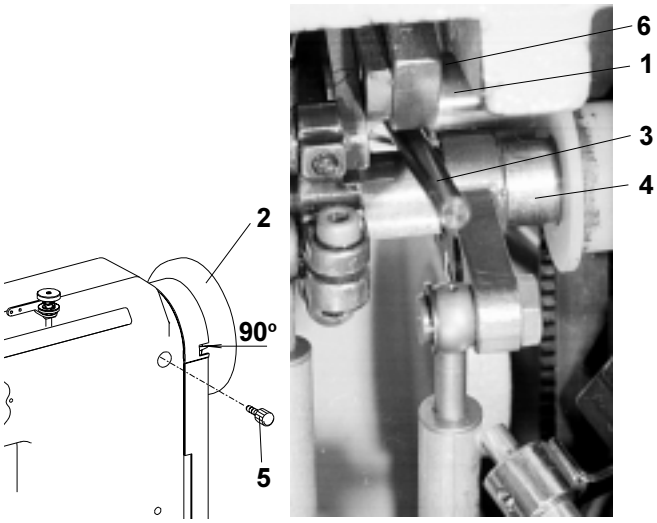

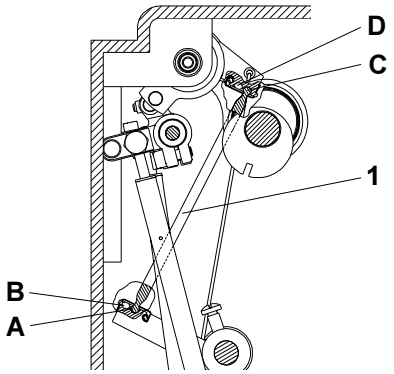

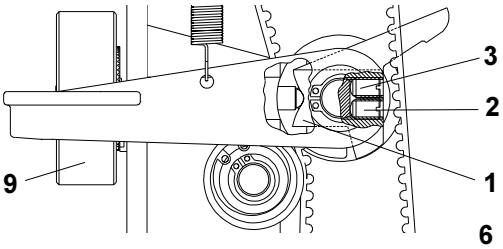

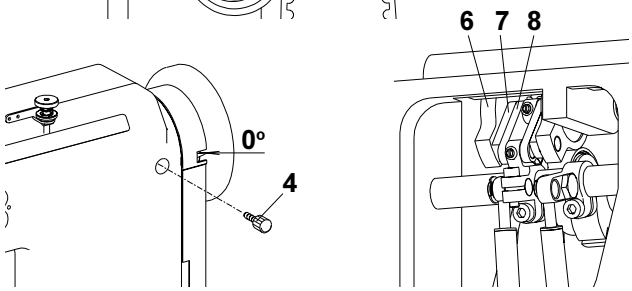

3.5 Feeding mechanism of the needle feed and of the lower feed wheel

3.5.1 Description

The feeding mechanism is formed by the leverage (1) which is driven from the main shaft through the eccentric with connection rod (2). The feeding motion is transmitted by the shaft (3) on the clutch of the bottom feed (7).
The engaging and the disengaging function of the clutch (7) is controlled from the lower shaft (8) through the eccentric with the connecting rod (9) and through the wedge coupling (10).
The feeding movement is transmitted by the shaft (11) through the chain transmission (12) onto the wheel feeder (13).
The stitch length is set by the knob (14) through the leverage (15) to the feeding mechanism (1).

3.5.2 Stitch length mechanism

3.5.2.1 Setting the upper eccentric

The eccentric (1) must be set in its angular position in such a way that the horizontal component of the needle motion is in a phase delay from the vertical component of this movement. This refers to the angle of 90° on the handwheel (2), when the setting stick (3) is engaged into the eccentric (1) and leans from above against the feeding shaft (4).

Caution! Danger of injury!
Switch off the main switch! Before starting the setting operation, wait until the motor stops!

- Set the angle 90° on the handwheel (2) and lock it with the screw (5) which is included in the accessory of the machine (tighten it carefully).
- Insert the setting stick (3) into the hole in the eccentric (1) and prop it against the feeding shaft (4).
- Shift axially the eccentric on the shaft up to its extreme position to the right or to the left and place it in the medium position.
- Tighten the screws of the eccentric (6) to the utmost (one screw first and, in turning a bit the handwheel, another screw too).

3.5.2.2 Setting the prop

In this machine with a wheel feed, the prop (1) is mounted in the pits (A and C) as per the drawing.

3.5.2.3a Forward and rearward stitch length distribution (rough)

The cam (1) is to be set at the respective angle in such a way that the stirrup (6) is oriented in such a position, so that the connecting rods (7 and 8) are in a line with a thoroughly screwed in knob (9) and with turning the handwheel at 0°. This setting can be done only after having set the top eccentric according to the paragraph 3.5.2.1.

Caution! Danger of injury!
Switch off the main switch! Before starting the setting operation, wait until the motor stops!

- Set the zero stitch /screw in the knob (9) to the bottom of the cam (1)/.
- Set the angle 0° on the handwheel and lock it with the screw (4).
- Turn the screw (3) in the respective sense in such a way that the connecting rods (7 and 8) are in a line and tighten the screw (2).

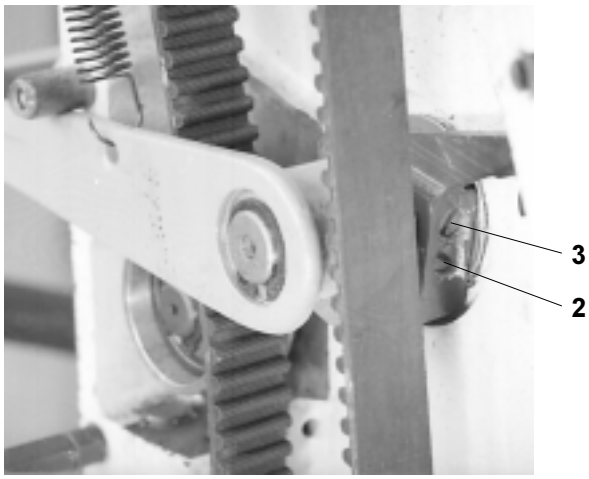

3.5.2.3b Forward and rearward stitch length distribution (fine)

When setting the maximum length of the stitch, the forward and the rearward stitch length must be equal with the maximum error of ± 5 %. This setting can be done only after having set the needle feed (par. 3.5.3) and the wheel feed (par. 3.5.4.1.2).

Caution! Danger of injury!
switch off the main switch! Before starting the setting operation, wait until the motor stops!

- Set the maximum stitch length .
- Place a suitable material under the presser foot and mark therein the forward and the rearward stitch length.
- With an unequal length of the stitch, proceed to the correction of setting by turning the screws (2 and 3). When tightening the screw (3), the forward length of the stitch is shortened and inversely. When tightening the screw (2), the forward stitch length is lenghtened. Tighten the screw (2).

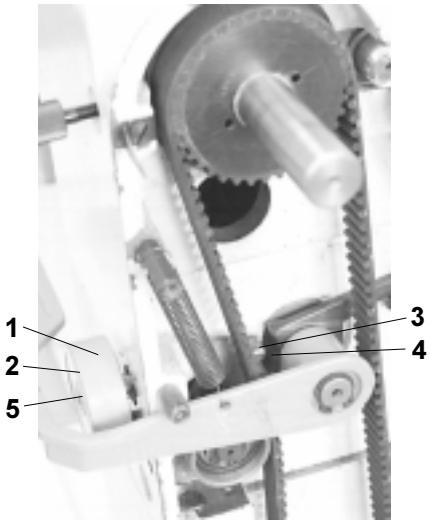

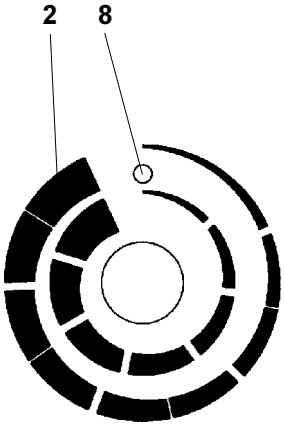

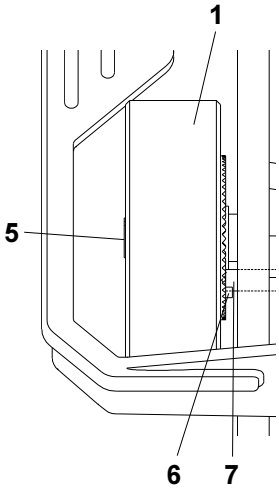

3.5.2.4 Setting the control knob (including the stitch length limitation).

The control knob (1) is to be set up in such a way that, when turning it in counterclockwise sense up to the stop, the maximum stitch length valid for the given sewing category is attained (cat. 1: 3 mm, cat 2: 5 mm, cat. 3 and 4: 7 mm). The scale of the control knob is to be oriented in such a position, so that the scale end corresponds to the maximum stitch length, excepting the first sewing category, where the stitch length of the indicator is 3 mm.

Caution! Danger of injury
Switch off the main switch! Before starting the setting operation, wait until the motor stops!

- Screw in the screw of the control knob in such a way that the ball of the screw (3) bears on the seat of the cam (4).
- Loosen the screw (5) and turn the control knob in the clockwise direction, until the pin (6) of the knob (1) bears on the pin (7). Tighten firmly the screw (5).
- Turn the knob in the counterclockwise direction up to the stop, when the pin (6) of the knob (1) bears on the pin (7).
- In a sewing test check up the length of the stitch, if this corresponds to the maximum stitch length valid for the given sewing category.
- If the stitch is longer, loosen then the screw (5) and turn the knob in the clockwise direction and inversely. Tighten firmly the screw (5)
- Insert a screwdriver into the hole (8) of the scale (2) and adjust the scale in such a way that the maximum length on the scale is against the marking of the stitch length on the machine arm.
- For the sewing category 1, set the control knob (1) on the stitch length of 3 mm and check it by a sewing test.
- Loosen the screw (5) and turn the control knob (1) in the counterclockwise direction, until the pin (6) of the knob (1) bears on the pin (7). Tighten firmly the screw (5).
- Put a screwdriver into the hole (8) of the scale (2) and adjust the scale in such a way that the value of the stitch length on the scale against the marking on the arm is 3 mm.

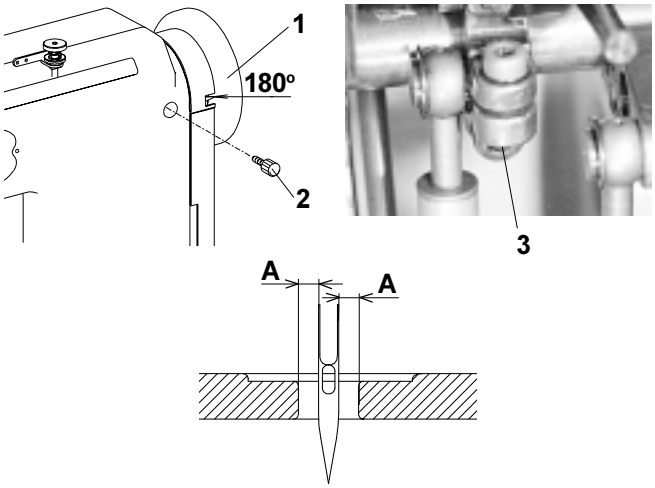

3.5.3 Setting the needle feed (rough)

In the lower dead point of the needle bar (needle), the distances „A“ between the needle and the walls of the needle aperture in the throat plate insert must be alike.

Caution! Danger of injury!
Switch off the main switch! Before starting the setting operation, wait until the motor stops!

- Set the needle bar to its lower dead point /corresponding to the anle of 180° on the hand wheel (1)/.
- Fix the position by tightening screw (2).
- Loosen screw (3) and set the distances „A“. Then retighten screw (3).

3.5.4 Lower feed wheel

3.5.4.1 Feeding clutches

3.5.4.1.1 Description

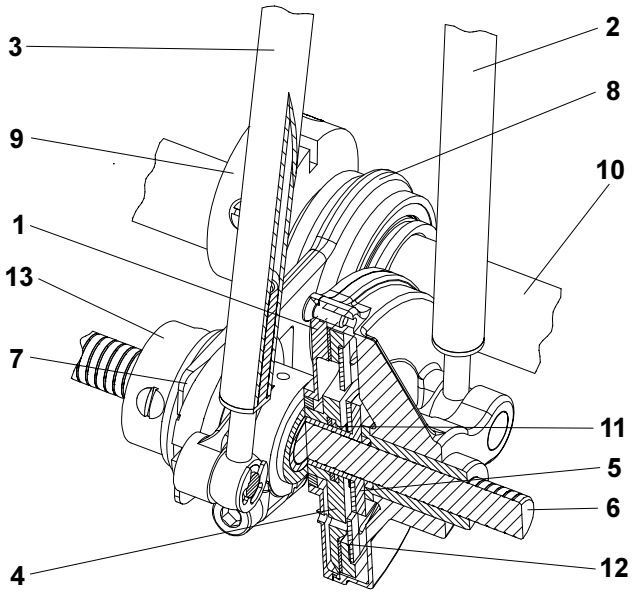

The feeding clutch is formed by the clutch cover (1) driven from the connecting bar (2), by the clutch star (4) driven from the connecting rod (3) and by the carrier plate (5) firmly connected with the shaft (6). Of the clutch give the connecting rods (2 and 3) an opposite direction swinging movement. The clutch is coupled by means of the wedge (7) on the connecting rod (8) through the eccentric (9) which is placed on the lower shaft (10).

In the position, when the wedge is disengaged, the star (4) is shifted out from the frictioning engagement with the lining of the carrier plate (5) by means of the spring washer (11). The plate (5) lining is then pushed by means of a flat profiled spring (2) against the cover of the clutch (1).

In the position, when the wedge is disengaged, the star (4) is pushed against the plate (5) lining and, at the same time, the friction connection with the cover of the clutch (1) is disconnected. Within a short instant, when engaging and disengaging with the carrier plate (5), there are in a friction engagement both the cover (1) and also the star (4), namely in the dead centre of the connecting rods (2 and 3). The setting of the change-over of clutches is done by tightening or by loosening the nut (13).

3.5.4.1.2 Setting the lever of the second step of feeding (angle, position).

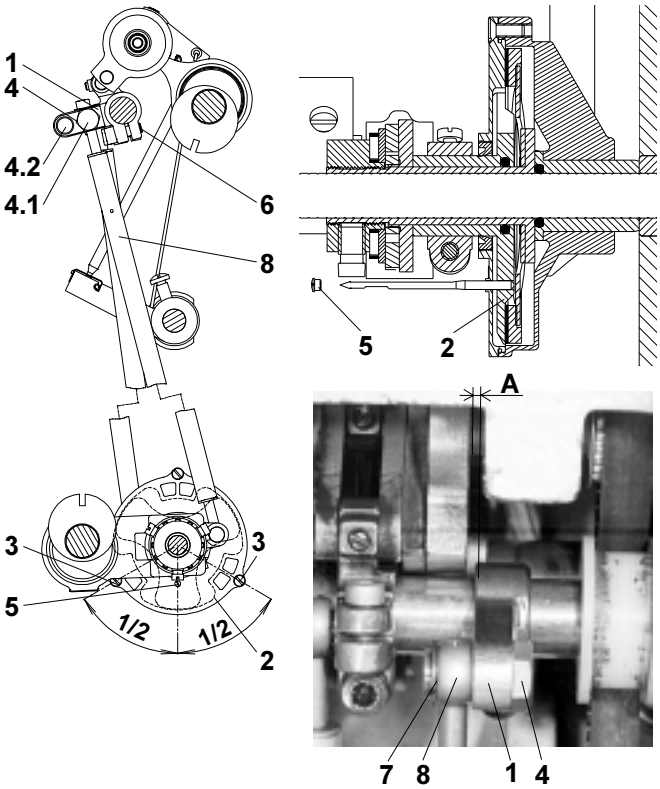

The lever of the second step (1) must be set in such a way that, in the bottom dead centre of the needle, a part of the clutch disk (2) halves the angle between the screws (3). The pin screw (4) can be mounted into the position (4.1 - corresponds to the maximum stitch length of 5 mm) or into the position (4.2 - corresponds to the stitch length of 7 mm). The position of the pin screw is given by the sewing category (see par. 11.2).

Caution! Danger of injury!
Switch off the main switch! Before starting the setting operation, wait until the motor stops!

Lever (1) displacement.
- Loosen the screw (6).
- Set the maximum stitch length.
- Set the angle 180° on the handwheel.
- Unscrew the screw (5) and put the needle shank in its hole.
- Turn the lever (1) until the needle drops into the clutch disk (2).
- Side set the lever (1) to the measure „A“= 0.5 to 1 mm.
- Tighten the screw (6).
- Screw in the screw (5) and seal it with the Loctite cement.

Change of the position of the pin screw (4).
- Remove the retaining ring (7).
- Unscrew the screw (4) and screw it into the new position and tighten it duly. Mount the connecting rod (8) and the retaining ring (7).

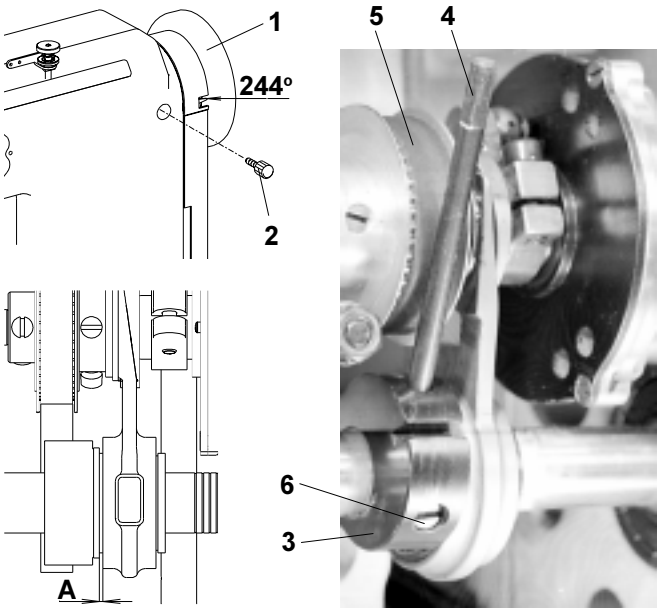

3.5.4.1.3 Setting of the lower eccentric

The rotation of the eccentric (3) must be delayed in phase by 1/4 revolution against the rotation of the eccentric of the stitch length. This corresponds to the angle of 244° on the handwheel (1), when the setting pin (4) is put into the eccentric (3) which is in contact with the indented belt (5).

Caution! Danger of injury!
Switch off the main switch! Before starting the setting operation, wait until the motor stops!

- Set 244° on the handwheel (1) and lock it with the screw (2), which is included in the accessory of the machine (tighten it carefully).
- Put the setting stick (4) into the hole in the eccentric (3) and prop it from below against the indented belt (5).
- Set eccentric (3) axially.
- Tighten it the utmost the screws of the eccentric (6).
- By means of the handwheel, turn the eccentric (3) into the marked position and check in this position the clearance „A“ = 0.05, proceed eventually to its correction by a new side setting of the eccentric.

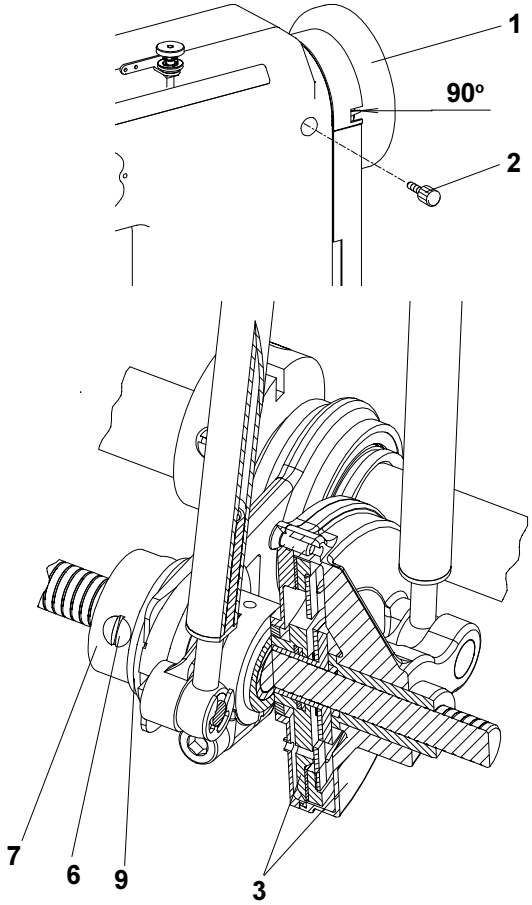

3.5.4.1.4 Setting the engagement and disengagement of the clutches

The nut (7) is to be side set in such a way that the shifting of the clutches is done at the moment when the clutch disks (3) do not move, which means, when they are at the dead center of their oscillating movement. This corresponds to the angle 90° on the handwheel.

Caution! Danger of injury!
Switch off the main switch! Before starting the setting operation, wait until the motor stops!

- Loosen the screws of the indented pulley of feeding and shift it to the left.
- Set the maximum stitch length.
- Set the angle 90° on the handwheel and lock it with the screw (2). which is included in the accessory of the machine (tighten it carefully).
- Loosen three screws (6) in the nut (7) and unscrew it by 2 mm to the left.
- Tighten slowly the nut (7), until it strikes against the axial bearing (9). (At this moment, the tightening moment increases in jumps) and tighten the screws (6).
- Set the the handwheel on 85° and push the backtacking lever, the feeder is to turn against the movement of the needle. Set then the handwheel on 95°, the feeder is to be turned in the sense of the needle movement. If not being so, correct the side setting of the nut (7). When the clutches shift too soon, turn a bit the nut (7) to the right and inversely.
- Tighten the screws (6).
- Return the indented pulley in its original place according to the paragraph 3.6.2.

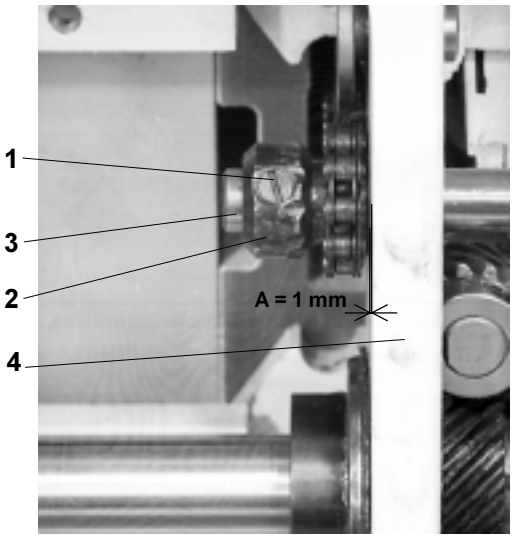

3.5.4.2 Wheel feeder and its post

3.5.4.2.1 Setting the chain wheel

The bottom chain wheel (2) must be set in such a way that the chain does not catch the rib (4).

Caution! Danger of injury!
Switch off the main switch! Before starting the setting operation, wait until the motor stops!

- Loosen both screws (1).
- Turn the chain wheel (2) until the chain clutch appears.
- Set the distance „A“= 1 mm between the chain clutch and the rib (4).
- Tighten firmly the screws (1).

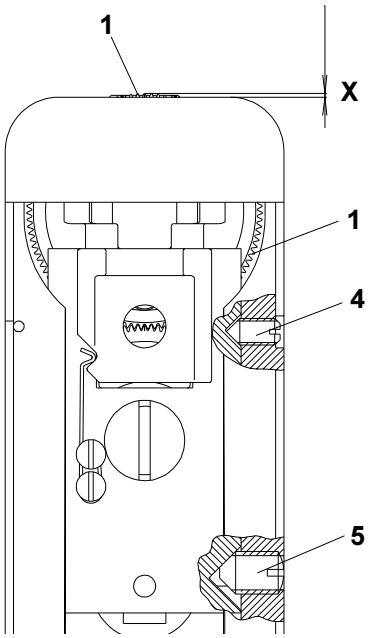

3.5.4.2.2 Height setting of the feeder and tensioning of the chain

The wheel feeder (1) is to be set in such a way that the points of its teeth overtop the throat plate by „X“= 0.3 to 0.7 mm. When sewing soft and thick materials, it is necessary to increase the value „X“, until a good quality of feeding is attained, but only to the measure of not deteriorating the beginning of sewing after the carried out thread trimming. With every correction of the teeth height, the tension of the chain (2) is to be corrected.

Caution! Dangere of injury!
Switch off the main switch! Before starting the setting operation, wait until the motor stops!

- Loosen the screw (3).
- Loosen the screw (4).
- Loosen or tighten the screw (5) and push simultaneously with finger the feeder (1) downwards, until the required height of the teeth „X“ of the wheel feeder is attained.
- Tighten then still the screw (5) by 45° (1/8 revolution).
- Tension the tensioner (6) up to the stop. Be careful in side shifting it to the centre of the chain. Tighten the screw (3).
- Loosen the screw (5) by 45° (1/8 revolution), into its original position. In this way, the optimal clearance of the chain transmission is attained.
- Tighten the screw (4).
- Correct the set height of the top roller according to the par. 3.5.5.

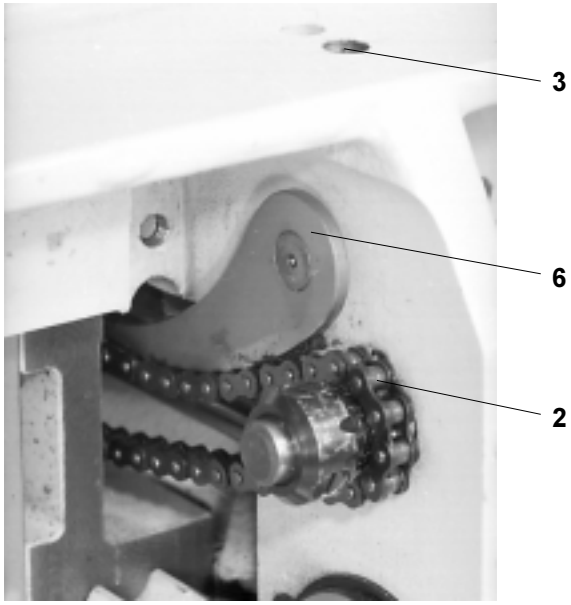

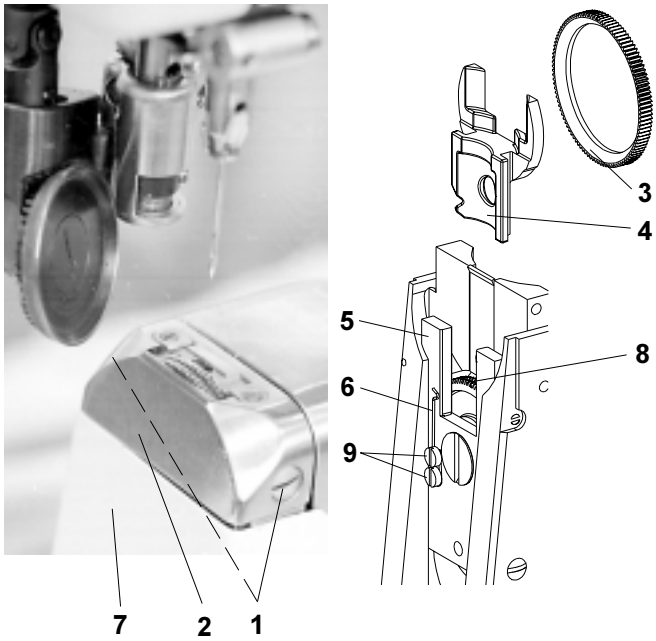

3.5.4.2.3 Replacement of the feeder

For the replacement of the wheel feeder (change of the wheel feeder according to the machine setting - see par. 11.2 - setting of the machine - feeder - pitch of the teeth).

Caution! Danger of injury!
Switch off the main switch! Before starting the setting operation, wait until the motor stops!

- Unscrew the screws (1) and remove the throat plate (2).
- Unscrew the guard (7).
- In pulling upwards (securing by a spring), pull out the feeder (3) with the guide (4).
- Replace the feeder (3).
- Insert the feeder with the guide into the groove of the holder (5).
- Mount the throat plate (2) and tighten up the screws (1).
- Check up, if the spring (6) pushes the guide (4) with the feeder (3) against the wheel (8).
- In the opposite case, loosen the screws (9),tense up the spring in such a way,so that the guide (4) with the feeder (3) is pushed against the wheel (8) and tighten the screws (9).
- Mount the guard (7) and tighten the screws.

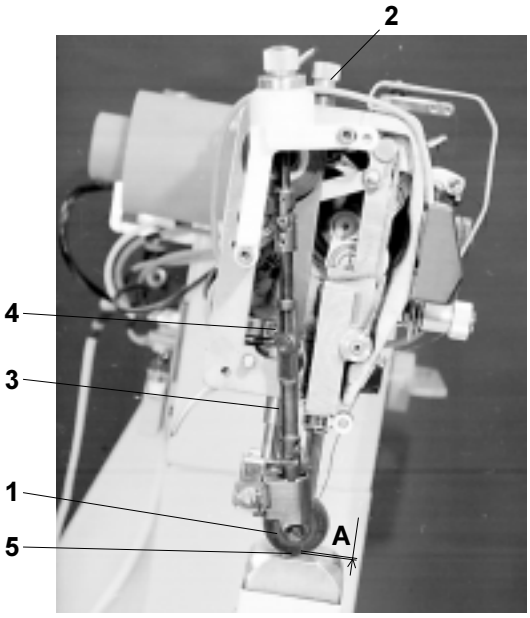

3.5.5 Setting the top roller (pressing force, height)

When lowering the top roller (1), set the clearance „A“ between the feeder (5) and the top roller to the maximum of 0.2 mm. Set the pressing force of the top roller (1) so as to avoid the slippage of the sewn material when feeding it.
Method of setting the height of the top roller:
- Lower by hand the presser bar (3) with the top roller (1) above the wheel feeder (5).
- Loosen the screw (4) and set the required value „A“ (0.2 mm).
- Tighten the screw (4).

Setting the force of the top roller (1).
- In screwing in the screw (2),the force of the top roller is increased and inversely.

3.6 Feeding mechanism of the top roller

3.6.1 Description

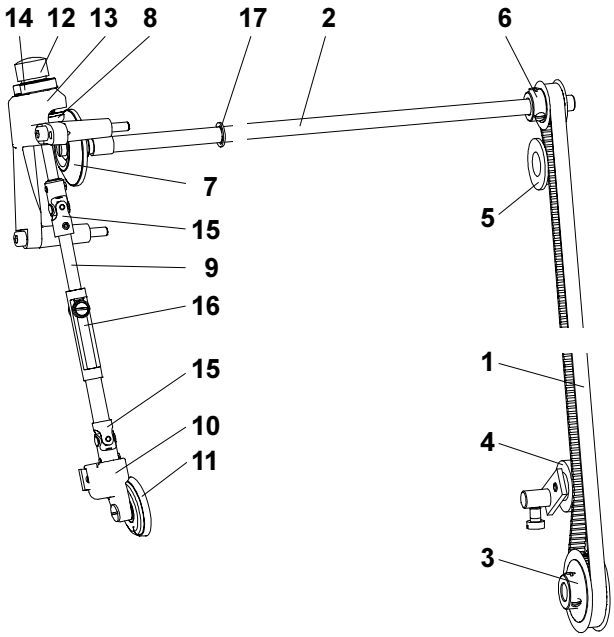

The starting movement for the drive of the top roller feeder is the bottom feeding shaft. From this shaft, the movement is transmitted by the indented belt (1) onto the top feeding shaft (2). A component part of the transmission by indented belt is the pulley (3), the tensioning roller (4), the roller (5) and the pulley (6). Starting from the shaft (2), the movement is further transmitted through the friction wheels (7 and 8) of drive conversion unit onto the articulated shaft (9). From this articulated shaft, the movement is transmitted by a cone transmission, situated in the holder (10), onto the feeder wheel (11). The drive conversion unit serves for compensating the differences in feeding by the driven top roller and by the lower feed wheeler. By turning the screw (12), the change of the gear speed ratio is attained. After having set in accordance with the par. 3.6.6, the screw (12) in the holder (13) is to be locked by the nut (14). The pressure of the friction wheels (7 and 8) is ensured by the compression spring in the shaft (2). To avoid a complete pushing out from the arm, the shaft is locked by a stirrup ring (17). The shaft of the friction wheel (8) is mounted in the screw (12) on needle bearings. The articulated shaft (9) contains two joints (15) and a telescopic part (16). Both these elements secure the lifting and the tilting of the top roller.

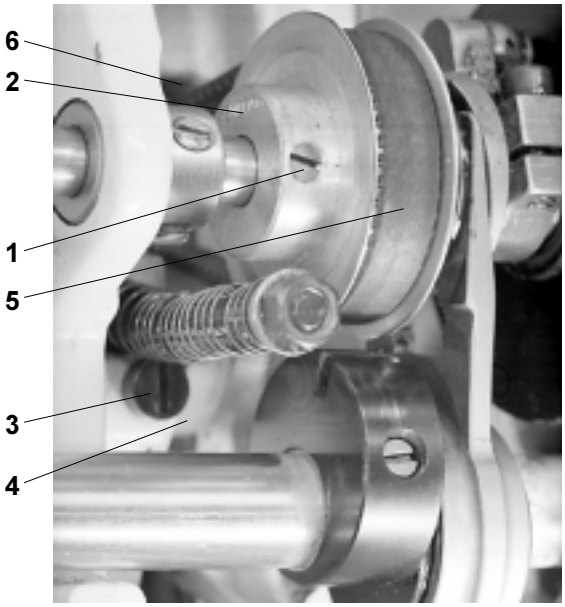

3.6.2 Side setting of the indented lower pulley

The pulley must be set up in such a way that the belt passes through the centre of the passing hole in the bedplate. The setting operation is to be done as follows:

Caution! Danger of injury!
Switch off the main switch! Before starting the setting operation, wait until the motor stops!

- Loosen the screws (1) of the pulley (2).
- Loosen the screw (3) of the tensioning roller (4)
- Set the pulley (2) in such a way that the belt (5) passes through the centre of the passing hole in the bedplate (6).
- Tighten the screws (1).
- Set the tensioning roller (4) axially in such a way that the belt (5) is set at the middle of the tensioning roller (4).
- Set the tensioning roller (see par. 3.6.4).
- Tighten up the screw (3) of the tensioning roller (4).

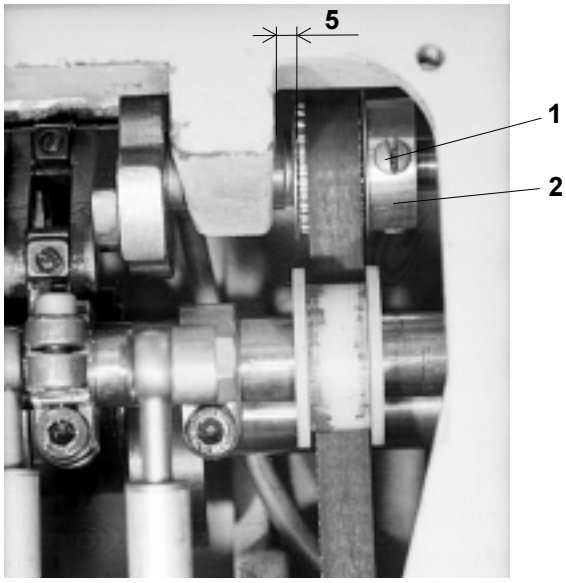

3.6.3 Side setting of the indented upper pulley

The pulley is to be set in such a way that the indented belt is not crossed and the pulleys are in line. The setting thereof is to be done as follows:

Caution! Danger of injury!
Switch off the main switch! Before starting the setting operation, wait until the motor stops!

- Loosen the screws (1) of the pulley (2).
- Set the pulley (2) in such a way that the distance of 5 mm is attained in accordance with the illustration.
- Tighten the screws (1).

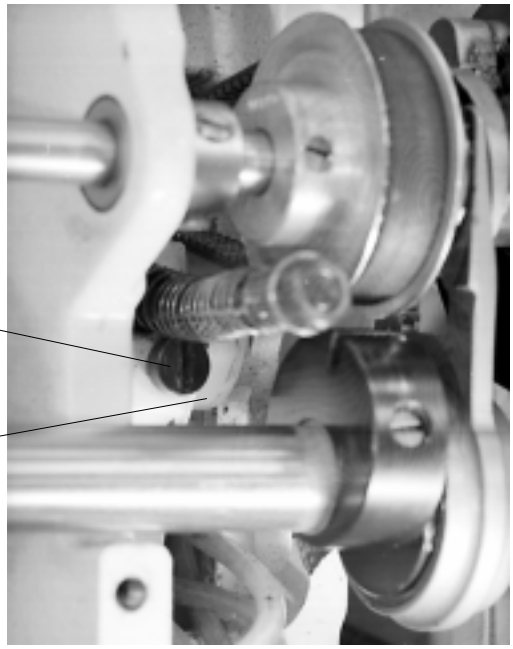

3.6.4 Setting the tensioning roller

The tensioning roller of the indented belt of the top feeding is mounted in a rotary way on the bedplate. The belt must be tensioned as needed in such a way that there is ensured the correct function of the transmission. Insufficient tension can cause skipping of the teeth, on the contrary, excessive tensioning enormously loads the mounting of the top shaft. The setting thereof is to be done as follows:

Caution! Danger of injury!
Switch off the main switch! Before starting the setting operation, wait until the motor stops!

- Loosen the screw (1) securing the lever of the tensioning roller (2).
- Tension the belt as needed (theoretically, in applying the force of 10 N in the middle of the belt with the deflection of 4 mm).
- Tighten the screw (1).

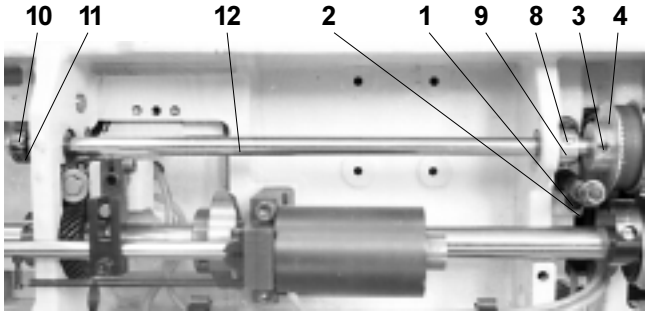

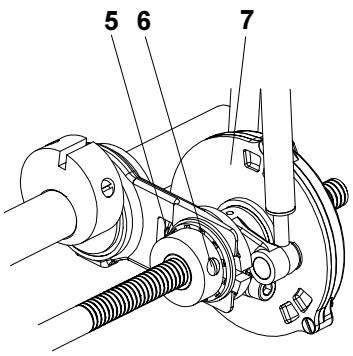

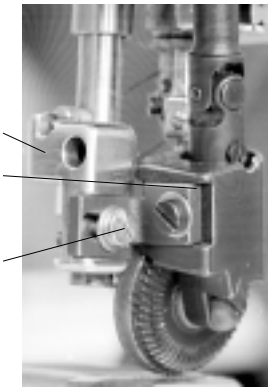

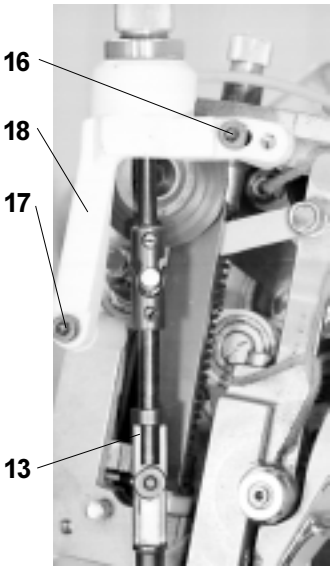

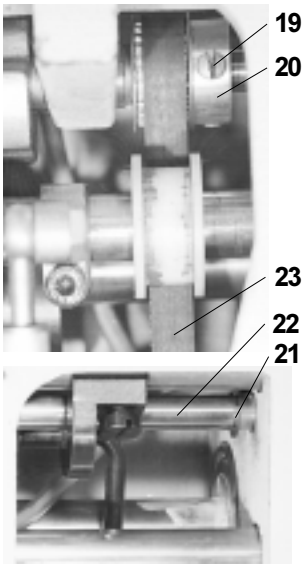

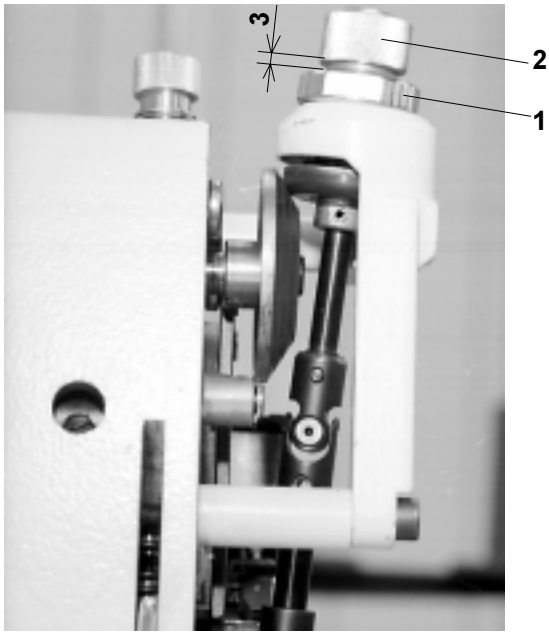

3.6.5 Replacement the indented belt

Before replacing the indented belt, the bottom feeding shaft is to be removed. The procedure is as follows:

Caution! Danger of injury!
Switch off the main switch! Before starting the setting operation, wait until the motor stops!

- Loosen the screw (1) of the tensioning roller (2) and loosen it.
- Loosen the screws (3) of the pulley (4) and shift it to the left in such a way that the screws (5 and 6) of the feeding clutch (7) are accessible.
- Loosen the screws (5 and 6).
- Loosen the screw (8) of the axial ring (9).
- Loosen the screws (10) of the chain wheel (11).
- Push the shaft (12) to the left in such a way that it is out of the pulley (4).
- Remove the pulley (4).
- Remove the front guard.
- Loosen and unscrew the screw (4) of the holder of the wheel (15) and remove it from the holder (24).
- Loosen the screws (16 and 17) of the holder (18).
- Remove the holder (18) together with the holder (15) and articulated shaft (13) from the machine.
- Loosen the screws (19) of the pulley (20).
- Remove the retaining ring (21) from the shaft (22).
- Hold the pulley (20) and pull out the feeding shaft (22) from the arm in such a way that it is possible to remove the indented belt (23) from the arm of the machine.
- Replace the belt with a new one and proceed to the assembly (inverted procedure of dismantling).
- Proceed to the setting operation according to the par. 3.6.2, 3.6.3 and 3.6.4.

3.6.6 Setting the feeding difference

The size of feeding by the driven top roller is regulated by means of a regulating screw. The top roller feeding is to be set in cases, when a difference between the size of the top and bottom feeding of the sewn material is evident. This will show up in upward or downward bending of the sewn parts. It is therefore necessary, when bending the sewn parts:
1. upwards - to increase the feeding performance of the top roller.
2. downwards - to reduce the feeding performance of the top roller.
This setting operation is done as follows:
- Loosen the locking nut (1) of the adjusting screw (2).
- Turn the screw to the left (in increasing so the feeding performance of the top roller) or to the right (in reducing so the feeding performance of the top roller).
- Test the result of this setting in sewing.
- Tighten the locking nut (1).
- The standard setting for the zero difference is 3 mm (see Fig.) - the gap between the front faces of the screw (2) and the nut (1).

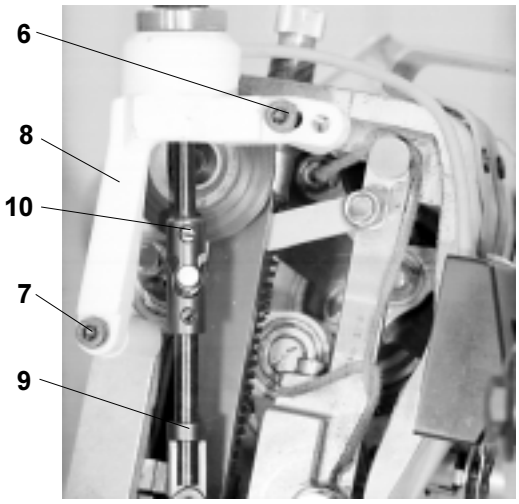

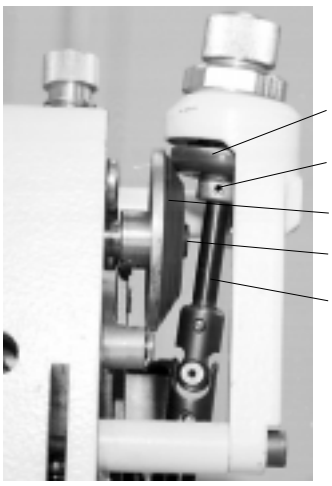

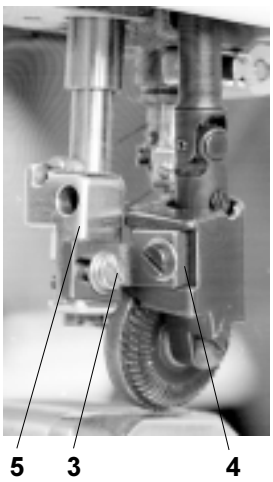

3.6.7 Replacement of friction wheels of the drive conversion unit

The worn friction wheels (1 and 2) of the drive conversion unit are to be replaced. This is done as follows:

Caution! Danger of injury!
Switch off the main switch! Before starting the setting operation, wait until the motor stops!

- Remove the front guard.
- Loosen and unscrew the screw (3) from the holder of the wheel (4) and remove it from the holder (5).
- Loosen the screws (6 and 7) of the holder (8) and remove the holder (8) with the telescopic shaft (9) and the driven wheel from the machine.
- In pulling it out, remove the telescopic shaft (9) from the holder (8).
- Loosen and unscrew the screw (10) and remove the shaft (11) with the friction wheel (12) from the telescopic shaft.
- Press out the pin (13) from the shaft (11) and the wheel (12).
- Replace the wheel (12) by a new one and proceed to a reassembly (an inverse procedure to the dismantling).
- Loosen the screw (14) of the conic friction wheel (15).
- Remove the wheel (15) and replace it.
- Proceed to a reassembly (an inverse procedure to dismantling).

3.6.8 Top roller

3.6.8.1 Selection of the top roller diameter

The machine can be supplied with two types of top roller, namely with the diameter of 25 mm and with the diameter of 35 mm. The suitability of the diameter used depends on the type of sewing and on the concrete technological operation. There are in general valid the following principles for the selection of the wheel diameter:

ř 25 mm - for sewing small radii
ř 35 mm - for sewing straight sections or big radii
- for sewing with great passages to thicker materials

3.6.8.2 Forward, rearward and side setting

The top roller must be in a defined position in relation to the needle:

a) view (see Fig. 1) - the value „X“ depends on the diameter of use top roller (ř 25 - 6.5 mm; ř 35 - 10.5 mm), it is measured from the the needle bar up to the roller edge when turning the handwheel to the 180° of the scale against the indicator
b) view (see Fig. 2) - the wheel edge must fit with the edge of the needle operture at the spot of the needle punch.

These values are to be set as follows:

Caution! Danger of injury!
Switch off the main switch! Before starting the setting operation, wait until the motor stops!

- Loosen the screw (1).
- By shifting the holder (2) with the top roller (3) in the groove of the holder (4) set the required value „X“ and tighten the screw(1).
- Loosen the screw (5)
- By shifting the holder (2) in the holder (6) set the bottom edge of the roller to the edge of the needle operture.
- Tighten the screw (5).

obr. 1

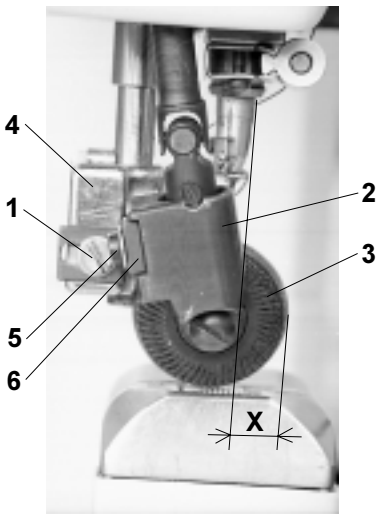

obr. 2

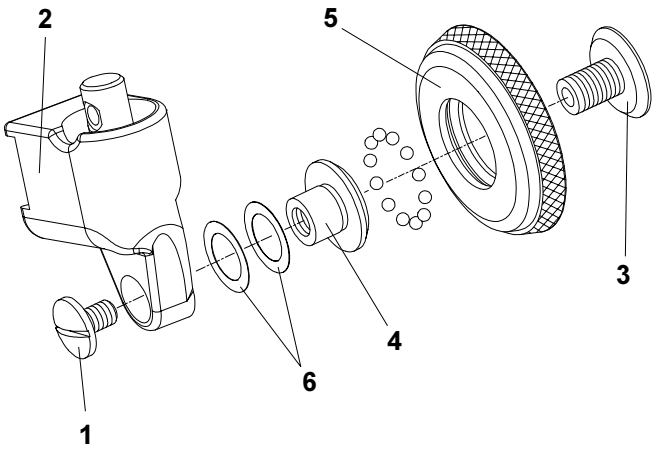

3.6.8.3 Setting the gear clearance

In the cone gear of the drive of the top roller foot, the minimum clearance must be set. A too small clearance will increase the friction resistance of the gear, the excessive clearance will influence the inaccuracy of feeding. The top roller itself is mounted on balls. With this type of mounting,it is also necessary to set the minimal possible radial clearance.
The given clearances are set as follows:

Caution! Danger of injury!
Switch off the main switch! Before starting the setting operation, wait until the motor stops!

- Loosen and unscrew the screw (1).
- Remove the top roller from its holder (2).
- By screwing the screw (3) against the pin (4) set the minimum radial clearance of the wheel (5) (it must turn easily with minimum clearance).
- Put two washers (6) on the pin (4).
- The pin (4) with the top roller is to be inserted into the hole of the holder (2).
- Screw in and tighten the screw (1).
- If there is not the least required adjustable clearance in the cone gear, repeat the above procedure in using the necessary number of washers (6).

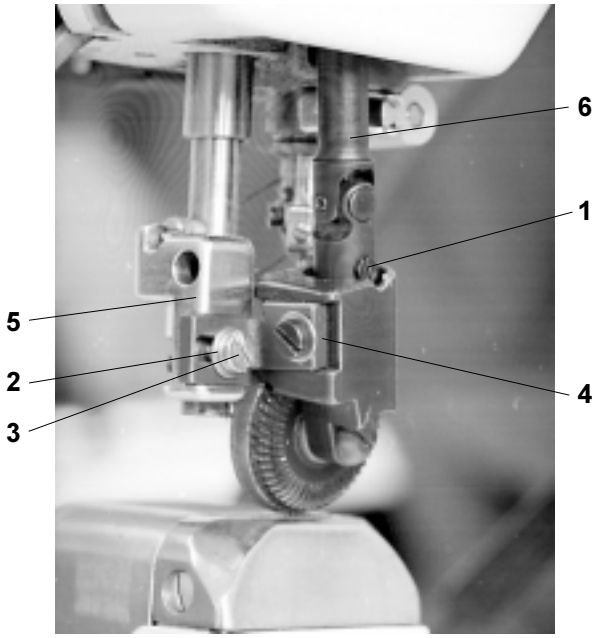

3.6.8.4 Replacement of the top roller

When replacing the top roller, proceed as follows:

Caution! Danger of injury!
Switch off the main switch! Before starting the setting operation, wait until the motor stops!

- Unscrew the screw (1).
- Unscrew the screw (3) with the washer (2).
- Remove the driven top roller with the holder (4) from the holder (5) and from the articulated shaft (8).
- Mount another top roller in inverted procedure to dismantling.
- Set the top roller according to the par. 3.6.8.2.

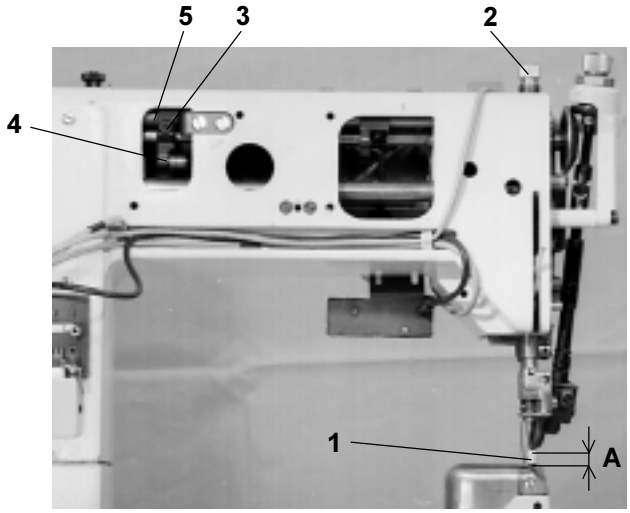

3.7 Setting the presser foot lift

The maximum lift of the presser foot when lifting the foot with knee lever or with electromagnet is to be „A“ = 12.5mm ± 0.7mm.

Caution! Danger of injury!
Switch off the main switch! Before starting the setting operation, wait until the motor stops!

- Place a cube (1) having the height of „A“ = 12.5 mm under the presser foot.
- Screw in thoroughly downwards the screw (2).
- Tighten slightly the screw (3) in such a way that the lever (4) turns on the shaft (5) with a certain friction moment.
- Push with the screwdriver on the lever (4), until it attains the wall inside the arm of the sewing machine. In this position, tighten duly the screw (3).
- Check the axial clearance of the shaft (5) which should be the least possible.
- Set the normal pressure force of the presser foot.

3.8 Bobbin winder

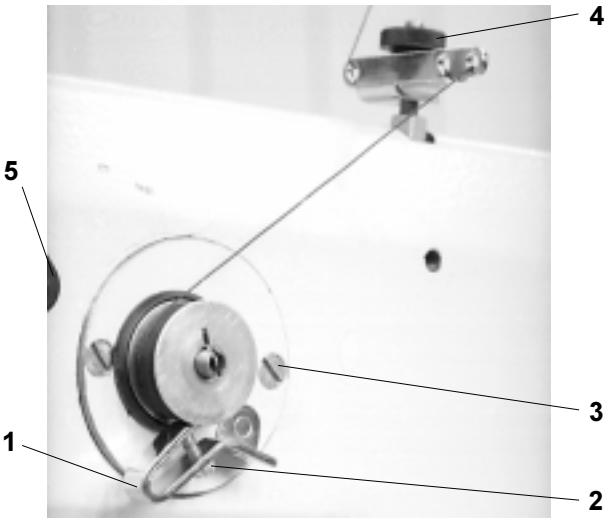

3.8.1 Description

The winder (bobbin winder) winds a reserve of the hook thread. It is driven by a spring-mounted friction gear, which stops after having filled the bobbin.
An ideal winding is attained with a sufficient pretension of the thread obtained on the thread guide (4) and with 1 mm under the diameter of the bobbin. The shaft is mounted in a swinging way and the friction gear is put into engagement by means of a pickup lever (1) and a cam. The winder is fixed on the machine arm by two screws (3). The thread is passed through according to the illustration, the thread is cut off after having stopped the winding operation using the cutting device (5).

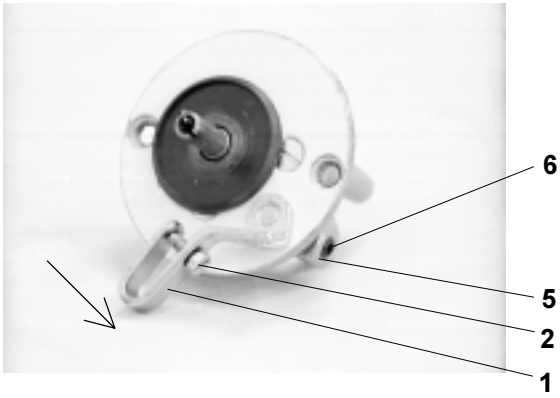

3.8.2 Setting the bobbin winder stop

The moment of interrupting the winding is determined by the mutual position of the pickup lever (1) and the cam (5) on a common shaft.
The cam is locked in its functional position by the screw (6). The mutual position is to be set on a not incorporated winder in such a way that in the moment, when the pickup lever leaves the space of the bobbin, the pressing function of the cam on the winders shaft is interrupted and it moves in the sense of the arrow. A fine setting is to be done on an incorporated condition in the machine. Using the screw (2), the position of the friction part of the pickup lever (1) is adapted. In opening the lever, the stopping function is accelerated. Its inverse function delays it. A test is to be done after having inserted the bobbin, when passing the thread through the device and when winding at the running of the machine.

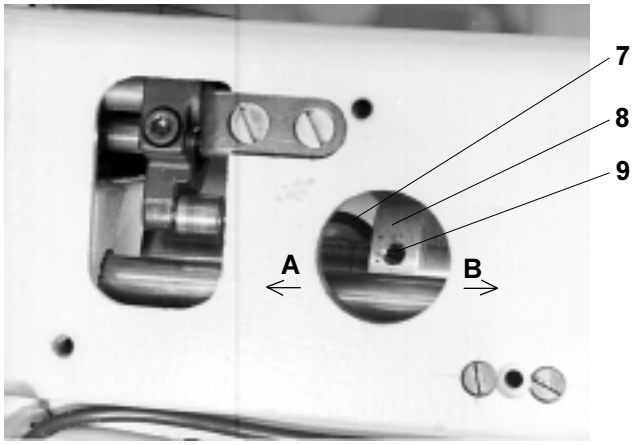

3.8.3 Setting the friction gear

The friction gear is formed frontally by the disk (8) on the main top shaft of the machine and by the disk (7) with a rubber ring on the shaft of the winder.

Caution! Danger of injury!
Switch off the main switch! Before starting the setting operation, wait until the motor stops!

- Proceed to the setting operation with a removed rear guard.
- The winder is in its stopped position.
- Loosen two screws (9) in the disk (8) through the hole in the arm.
- By shifting axially the disk in the sense A, B, set the disks of the winder (7) at the distance of 0.5 mm from the rubber ring.
- Tighten the screws (9) in the disk (8).
- Put the winder in its working position and proceed to a winding test.
- Mount the rear guard.

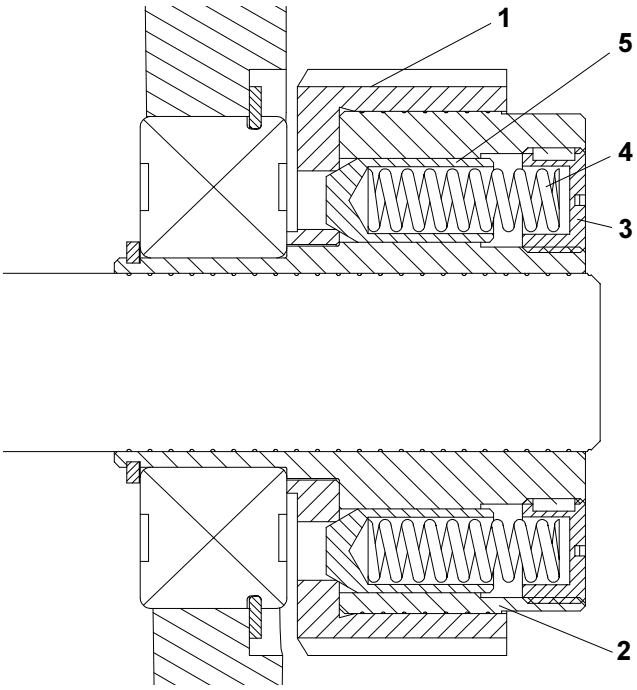

3.9 Safety clutch

3.9.1 Description

The machine is provided with a safety clutch which enables the turning through of the lower belt wheel (1) on the hub of the lower shaft (2), when the hook is blocked. This blocking occurs due to the penetration of thread into the hook path. With current running, this clutch should not disengage during the normal running. The mutual connection of the belt wheel (1) with the hub is enabled by the pins (5) which fit with their conic ends into the holes of the belt wheel. The pins are pushed by the springs (4). Putting the clutch in its working position, eventual checking its correct position are to be done in blocking the hook using a screwdriver and in turning a bit the handwheel.

3.9.2 Setting the disengaging moment

Caution! Danger of injury!
Switch off the main switch! Before starting the setting operation, wait until the motor stops!

The moment of 8 to 9 Nm is correctly set, when the screwed in adjusting screws (3) come to lie 0.5 to 1.5 mm under the face of the hub (2). When the clutch disengages during a normal run, the screws are to be turned by one thread to the right and a test is to be done during the running. In an opposite case, when the hook is blocked, but the clutch does not disengage, the disengaging moment of the clutch is to be reduced in turning the screws to the left.

Caution!
The clutch guarantees only one mutual position of the hub of the lower shaft (2) and that of the belt wheel (1). No checking according to the gauge marks is needed. Putting the clutch out of operation by excessive tightening of the screws (3) can cause, when blocking the hook, the destruction of the gear within the drive of the hook.

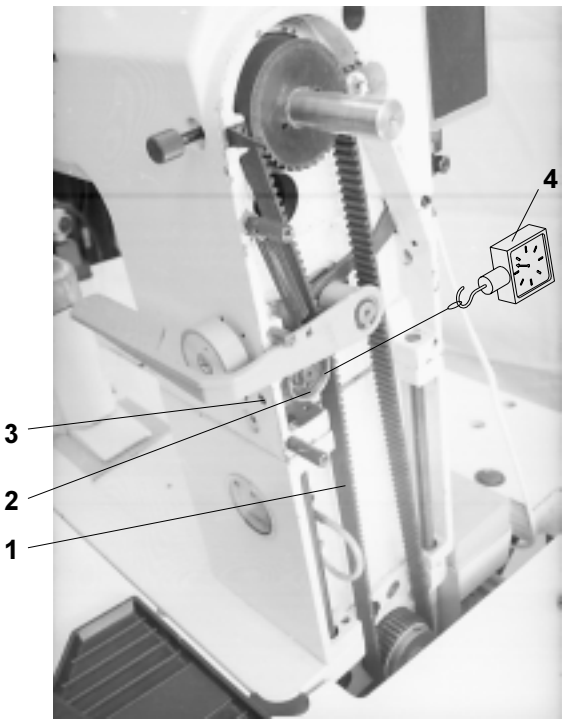

3.10 Indented belt transmission

3.10.1 Setting the tensioning roller of the indented belt

The optimum tension of the indented belt (1) is attained in setting the tensioning roller (2) in such position, when the roller applies the pressure of F = 20 N against the belt. The roller must be side set in such a way that the edge of the indented belt does not overlap over the edge of the roller.

Caution! Danger of injury!
Switch off the main switch! Before starting the setting operation, wait until the motor stops!

- Remove the handwheel and the belt guard, remove the V-belt.
- Unlock the fastening of the loop, on which the roller (2) is mounted in such a way that the loop turns freely.
- Lift the roller (2) upwards and, thereafter, using the dynamometer (4), pull horizontally the roller in applying the force of 2O N. In this position, tighten the fastening screw (3).
- Check the side shifting of the roller.

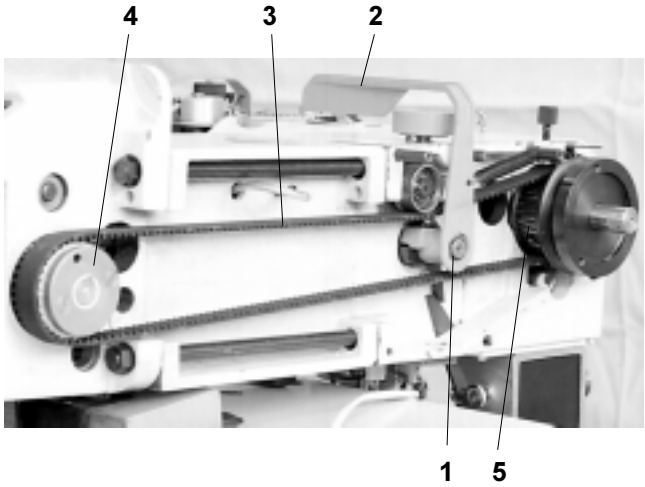

3.10.2 Replacing the indented belt

To observe: in machines with Mini-stop first remove the driving toothed belt as instructed in par. 3.12.
When replacing the indented belt, the mutual position of the pulleys (4 and 5) should be maintained.

Caution! Danger of injury!
Switch off the main switch! Before starting the setting operation, wait until the motor stops!

- Remove the handwheel, the belt guard and the V-belt.
- Remove the retaining ring (1) and remove the backtacking lever (2).
- Mark with a pencil the instantaneous position of the indented pulleys against the machine head in any position.
- Remove the indented belt (3) from the bottom indented pulley (4) first, and then remove the whole belt.
- Apply a new indented belt on the top indented pulley (5) first.
- Turn both indented pulleys in the formerly marked positions and apply the indented belt on the indented pulley (4).
- Tension the belt and mount the dismantled components in the inverse order.

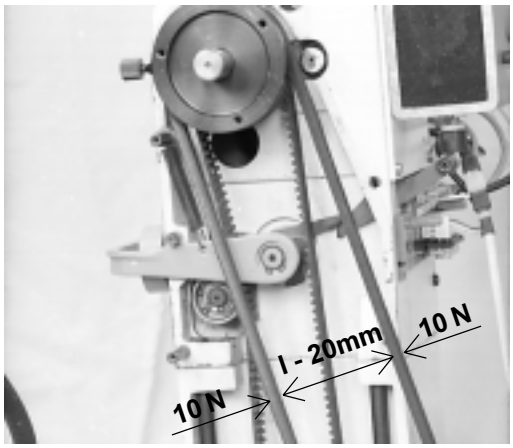

3.11 V-belt, motor - head

3.11.1 Tensioning

Caution! Danger of injury!
Switch off the main switch! Before starting the setting operation, wait until the motor stops!

The belt is correctly tensioned, when the opposite sides of the belt approach one to another by up to 20 mm in applying the force of 10 N. The belt is tensioned in turning respectively the motor in its holder.

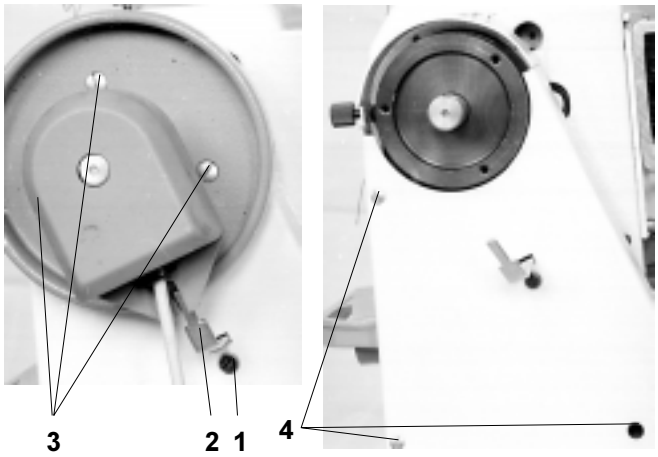

3.11.2 Replacing the V-Belt

Caution! Danger of injury!
Switch off the main switch! before starting the setting operation, wait until the motor stops!

- Loosen the screw (1) of the positioner arrest (2) and tilt the arrest.
- Unscrew the screws (3) of the handwheel.
- Unscrew the screws (4) of the belt guard and tilt the guard.
- Remove the belt guard of the motor and tilt the protections against falling out the belt from the motor pulley.
- Replace the belt.
- Tension the belt (see par. 3.11.1).

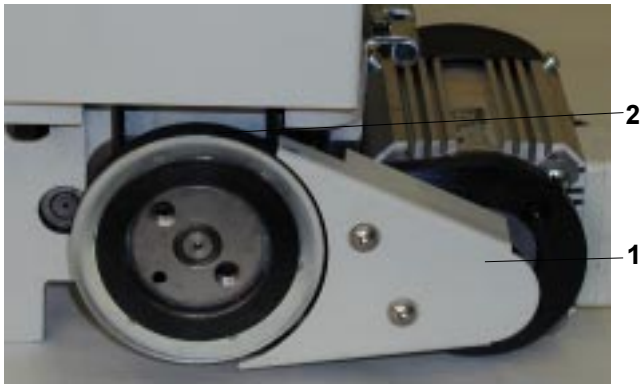

3.12 Driving toothed belt

3.12.1 To exchange the driving toothed belt

Caution! Danger of injury!
Switch off the main switch! before starting the setting operation, wait until the motor stops!

- Remove the machine head from the stand (uncouple the motor cables, the machine head cable, the position sensor, and screw off the wood screw and the screw from the hinges).
- Remove the belt guard (1).
- Replace the belt (2).

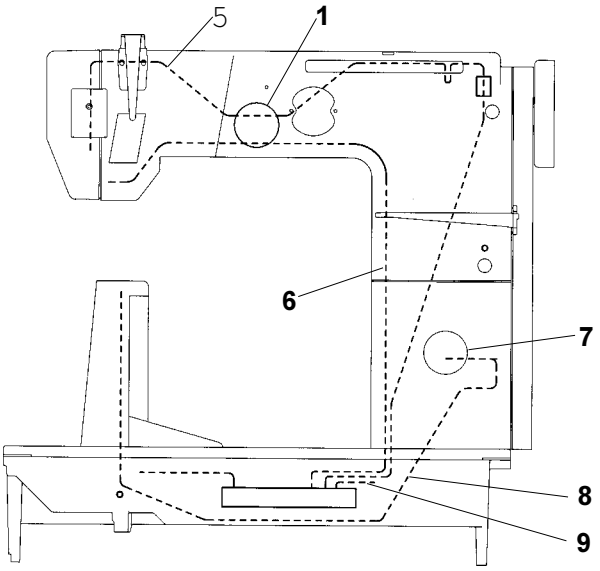

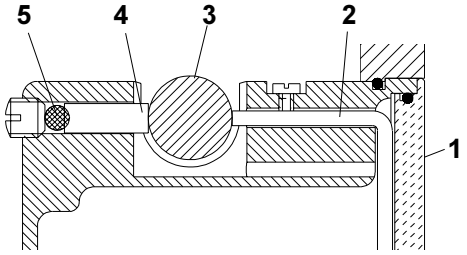

3.13 Lubrication

3.13.1 Description

In the main lubrication reservoir (1) there is a suction wick (2) which wipes against the shaft (3). The wick (4) collects oil from the shaft (3) and feeds it into the wick (5) which distributes oil to the lubricated spots. The left branch lubricates the needle and the thread mechanisms. The right branch lubricates the mechanism of the stitch length and, thereafter, pushed into the box (11). The wick (6) sucks off the excessive oil from the needle and the thread mechanisms and also pushed into the box (11). The lubrication reservoir (7) feeds oil through the wick (8) for lubricating the hook. The wick (9) lubricates the shifting wedge of the feed clutch. The wick (10) lubricates the gear of the hook drive.

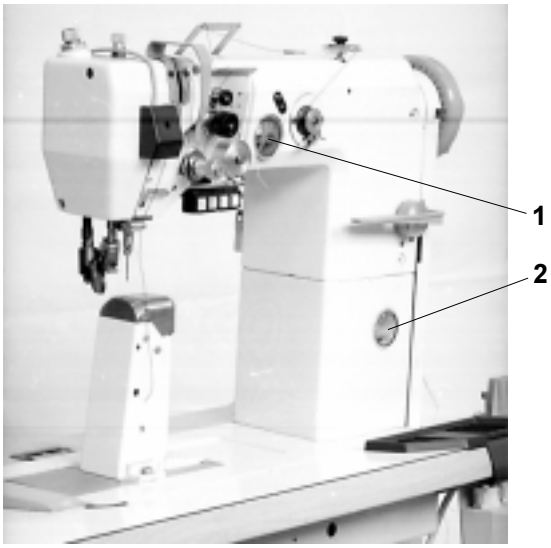

3.13.2 Refilling oil

For lubricating the machine oil Esso SP-NK 10 is used or other oil with the same quality. When putting the machine into operation, each mechanism of the machine is to be lubricated with several drops of oil. Oil is only refilled thereafter into the oil reservoirs using an oil can into the holes in the oil level indicators. The oil reservoir (1) is to be filled up to the half of its content. The oil reservoir (2) is filled up to the pouring holes.

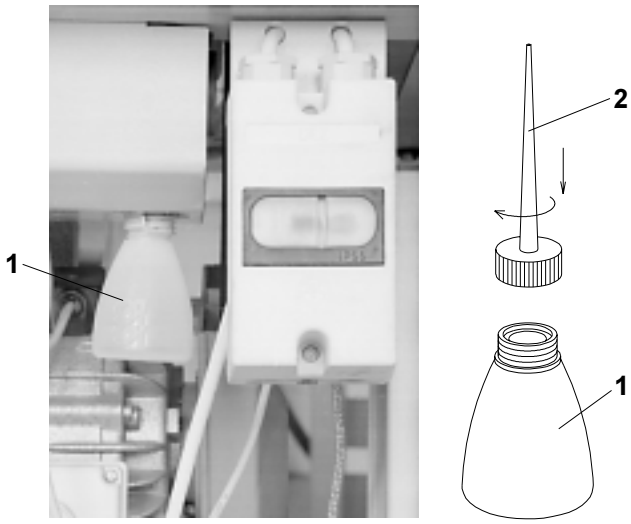

3.13.3 Multiple oil use

Oil which runs into the oil cup is collected in the collector (1) and may be reused for refilling the oil reservoirs in the machine - see par. 3.13.2.

The oil collector (1) with the collected oil is uscrewed and the top part of the oil can (2) which is added in the machine packing is screwed in. Oil is then refilled into the reservoirs on the machine head and everything is put into the original condition.

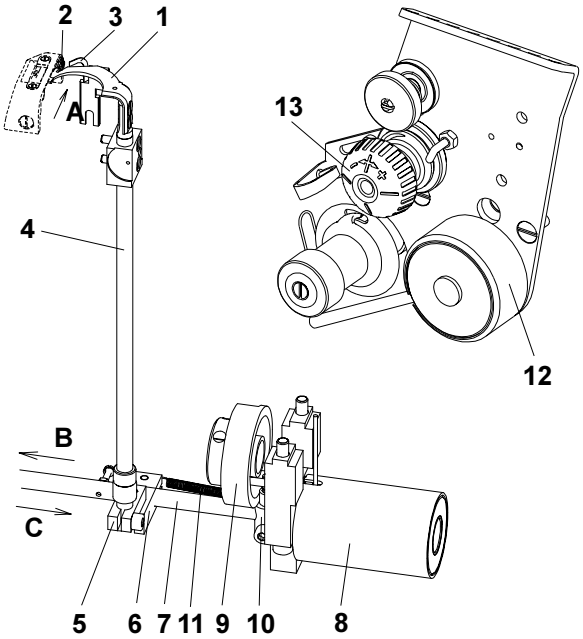

4. Thread trimming

4.1 Description of the trimming mechanism

During the trimming cycle, the moving trimming knife (1), in an opportune moment, hooks up the sewing threads and pulls them in the sense of the arrow (A) against the fixed knife (2) until the threads are trimmed. The spring (3) holds the hook thread after being trimmed off. The moving knife (1) is mounted on the shaft (4) which turns by means of the lever (5) under the effect of the fork (6) fixed on the shaft (7) which is shifted by the electromagnet (8) from its starting position in the sense of the arrow (B). When moving back in the sense of the arrow (C), the shaft (7) is shifted by the cam (9) through the pickup roller (10) into the starting position. The spring (11) maintains the mechanism in its starting position. The electromagnet (12), in an opportune moment, loosens the main tensioner (13). At the end of the trimming cycle, both electromagnets (8 and 12) are switched off.

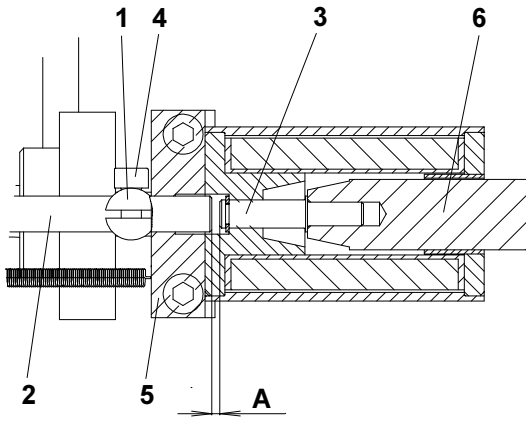

4.2 Setting the pickup roller

The holder of the pickup roller (1) is to be fixed in such a way that it is positioned, in its starting position, between the shaft (2) and the shaft (3), the respective gap „A“ = 0.2 to 0.4 mm.

Caution! Danger of injury!
Switch off the main switch! Before starting the setting operation, wait until the motor stops!

- With the loosened screw (4), put the holder of the pickup roller (1) up to the stop against the bracket (5) and, at the same time, the shaft (2) up to the stop against the shaft (3).
- With the holder (1) held on the stop, shift the shaft (2) in such a way that there appears the gap „A“ = 0.2 to 0.4 mm, and tighten the screw (4).
- Check the gap „A“ in shifting the armature (6).

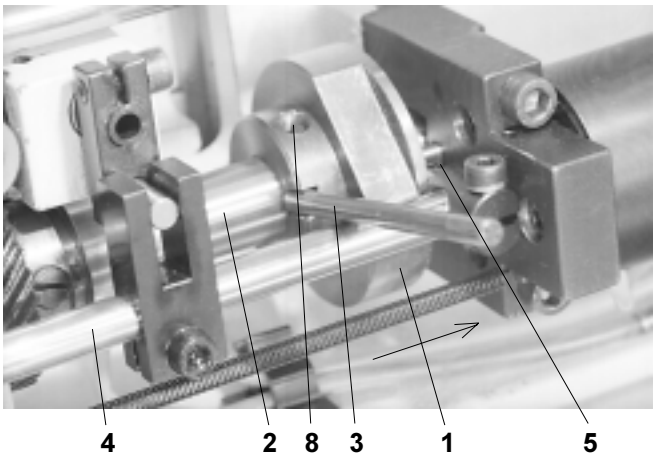

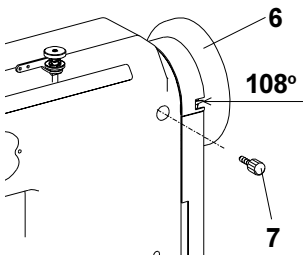

4.3 Setting the cam

The position of the cam (1) against the shaft (2) is to be such, so that when the adjusting pin is in contact with the shaft (4), the protractor scale of the handwheel (6) shows just the angle of 108°. If the pickup roller (5) is in its starting position of rest, the clerarance between the roller (5) and the cam (1) should be as small as possible but sufficient to prevent the cam from getting into accidental contact with the roller.

Caution! Danger of injury!
Switch off the main switch! Before starting the setting operation, wait until the motor stops!

- Set the angle of 108° on the handwheel (6) and lock it with the screw (7) which is included in the accessory of the machine (tighten with care).
- Shift the pickup roller (5) in the sense of the arrow up to the stop.
- Insert the adjusting pin (3), which is included in the accessory, into the cam and turn the cam, until the pin (3) gets the contact with the shaft (4).
- Insert a gauge having the thickness of 0.1 mm between the cam (1) and the pickup roller (2) and shift the cam against the gauge up to the stop. Tighten then the screw (8).
- Loosen the blocking of the handwheel, turn a bit the cam and tighten the second fastening screw of the cam too.

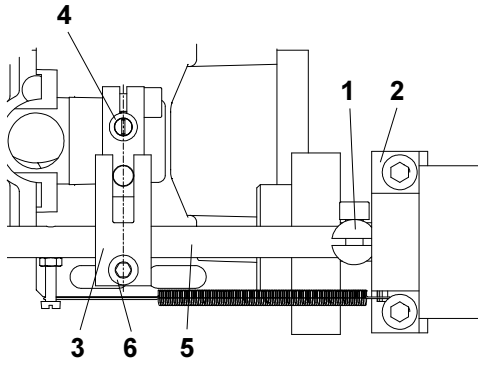

4.4 Setting the fork

In the starting position of rest of the trimming mechanism, when the holder (1) is in contact with the bracket (2), the axis of the fork (3) must intersect the axis of the shaft (4).

Caution! Danger of injury!
Switch off the main switch! Before starting the setting operation, wait until the motor stops!

- Shift the shaft (5), until the holder (1) strikes the bracket (2).
- Loosen the screw (6).
- Shift the fork (3) in such a way that its axis intersects the axis of the shaft (4).
- Tighten the screw (6).

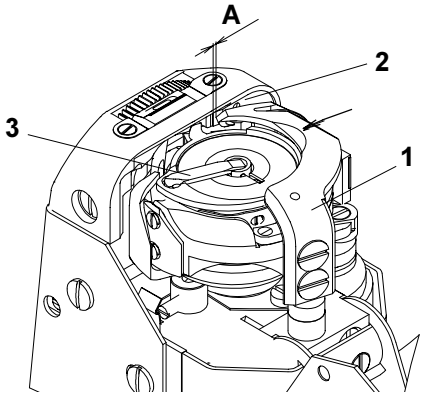

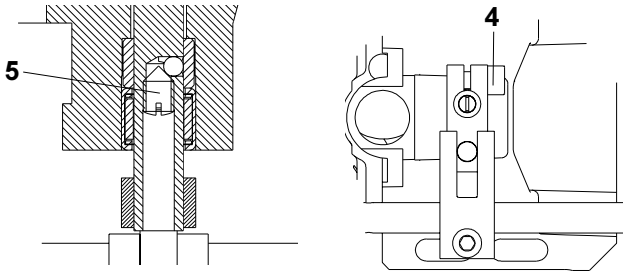

4.5 Setting the moving knife

The moving trimming knife (1) is to be placed in its starting position at rest with its end at the distance of the measure „A“= 0.1 to 0.5 mm from the edge of the fixed trimming knife (2). The height setting is to be such that its top surface is 1.8 mm below the top surface of the throat plate.

Caution! Danger of injury!
Switch off the main switch! Before starting the setting operation, wait until the motor stops!

- Loosen the screws (4 and 5).
- Turn the moving trimming knife (1) in the sense of the arrow and set it in height. Tighten the screw (5).
- Turn the moving trimming knife (1) into its starting position in such a way that the measure„A“ = 0.1 to 0.5 mm is attained. Tighten the screw (4).

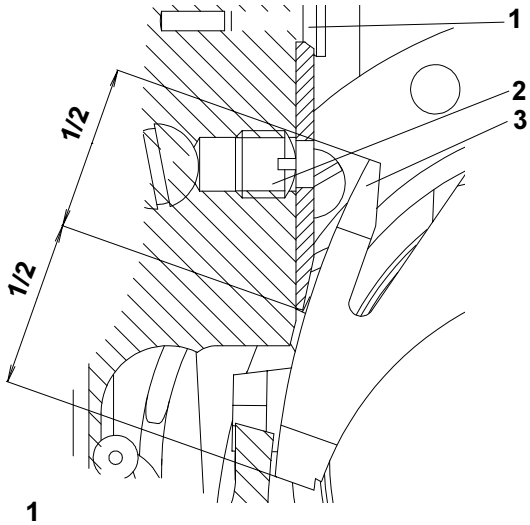

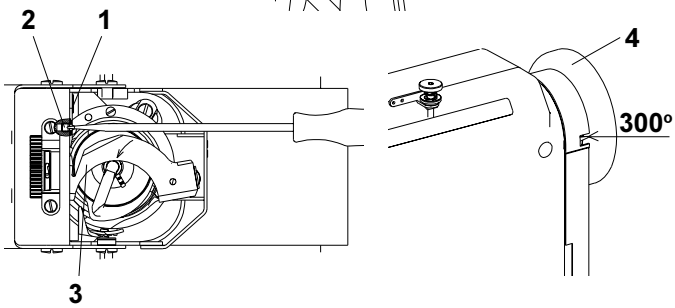

4.6 Setting the fixed knife

The fixed trimming knife (1) is to be tensed up by the screw (2) in such a way that it bears on the moving trimming knife in the 1/2 of its length. The knives need not to trim untensioned threads.

Caution! Danger of injury!
Switch off the main switch. Before starting the setting operation, wait until the motor stops!

- Set the angle of 300° on the handwheel (4).
- Shift by hand the moving knife (3) into the marked position.
- By turning the screw (2), try to set the tensing up of the fixed trimming knife (1).
- Check the bearing spot of the moving trimming knife (3) on the fixed trimming knife (1) and give it a correction, if needed.

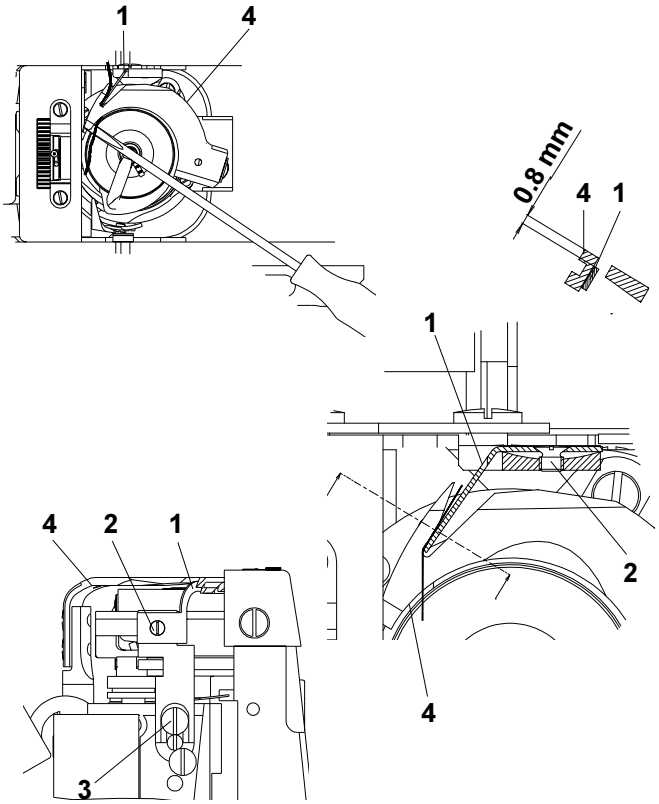

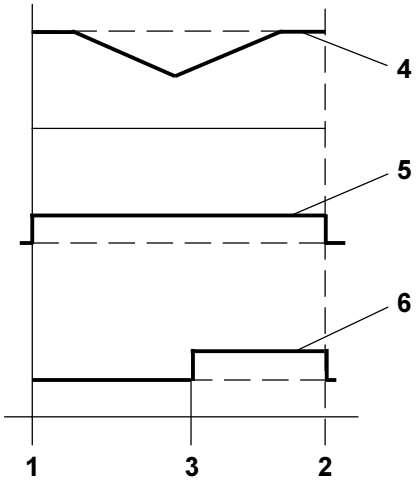

4.7 Setting the retaining spring of the hook thread

The retaining spring (1) holds the hook thread after having performed the trimming. It is to be set in such a way that the force necessary for pulling out the thread from the retaining spring (1) is approximately equal to the force necessary for pulling out the thread from the hook.

Caution! Danger of injury!
Switch off the main switch! Before starting the setting operation, wait until the motor stops!

- Using the screw (3),set the height of the top edge of the retaining spring (1) 0.8 mm below the top edge of the moving trimming knife.
- Shape the retaining spring (1) in such a way that it fits close with all its surface (without wedge) onto the moving trimming knife (4).
- Shape the retaining spring in such a way that it fits close, with the slightly tightened screw (2), onto the moving trimming knife without any pressure.
- Tighten the screw (2), until the necessary force for pulling the thread from the retaining spring is attained. The pulling force is tested using a screwdriver according to the illustration.

Caution!
The setting of the retaining spring (1) depends on the setting of the hook tension and differs then according to the respective sewing category.
The adjusting screw (2) should not be screwed in in such a way that the retaining spring gets over the perimeter of the moving trimming knife.

4.8 Setting the switching of electromagnets

The electromagnets of the trimming device and loosening of the tensioner must work in accordance with the diagram. This is ensured by setting the stopmotor (see the instructions for use of the stopmotor).

1- 1. position of the needle (225° on the handwheel);
/135° Mini-stop QE 3760/DA47MS/
2- 2. position of the needle (64° on the handwheel)
3- position of stopping the tensioner (10° ÷ 25° on the handwheel)
4- movement of the pickup roller
5- current of the trimming device electromagnet
6- current of the tensioner loosening electromagnet

5. Lifting the top roller by electromagnet

5.1 Description

The core of the electromagnet, respectively its pin must be set in such a way that the presser foot lifting is enabled.

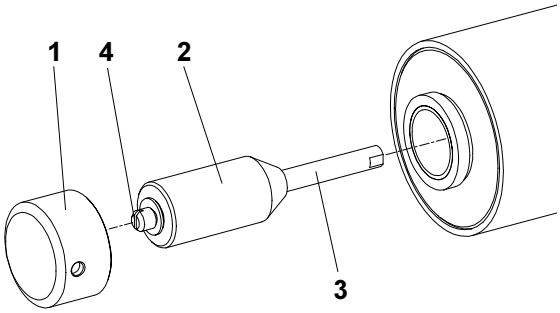

5.2 Setting the electromagnet pin

Caution! Danger of injury!
Switch off the main switch! Before starting the setting operation, wait until the motor stops!

- Unscrew the cap of the core (1) of the electromagnet.
- Shift the core (2) with the bar (3) and loosen the locking screw (4).
- By screwing the pin (3) in the core (4), set their mutual position in such a way that the core is fully pushed in with the maximum presser foot lift.
- Tighten the locking screw (4).
- Screw on the cap (1).

5.3 Setting the electromagnet current

The time response of the current of electromag. has 2 phases:
- initial switching on (0,2 ÷ 0,5 s) - the maximum force
- maintaining (when keying)

> It is necessary to set max. 40 % of keying (see instructions for use of the stopmotor). With a higher value thereof and with a long period of the presser foot in its lifted position there is a danger of electromagnet overheating.

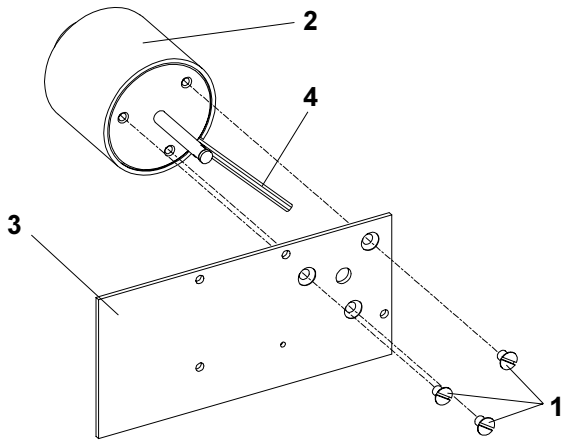

5.4 Aseembly of the top roller lifting electromagnet

> **Caution! Danger of injury!**
> Switch off the main switch! Before starting the setting operation, wait until the motor stops!

- Remove the rear guard (3).
- Using the screws (1), fasten the electromagnet (2) on the rear guard (3) with the given orientation of the outlet cable (4).
- Mount the rear guard (3).
- Connect the outlet cable (see par.7).
- Set the pin of the electromaghet (see par. 5.2).
- Set the current of the electromagnet (see par.5.3).

6. Backtacking using electromagnet

6.1 Description

The position of the electromagnet with regard to the backtacking lever must be set in such a way that it enables the maximum stitch length when sewing in forward and in rearward sense. If this position is not correct, the length of the stitch will be shortened in one or the other feed direction.

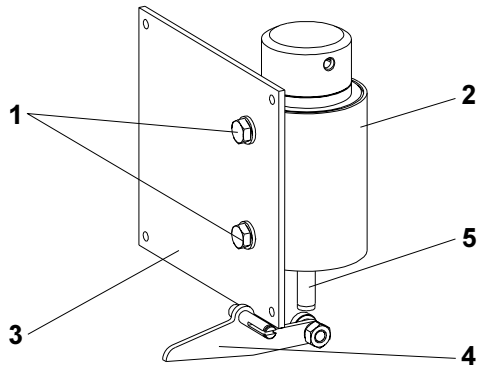

6.2 Electromagnet height setting

> **Caution! Danger of injury!**
> Switch off the main switch! Before starting the setting operation, wait until the motor stops!

- Set the maximum stitch length.
- Set the position of the electromagnet (2) against the midpoint of the grooves (1) of the guard (3).
- Mount the guard (3) on the head (the bar must have a clearance between the stop on the backtacking lever and the extreme top position at least of 0,5 mm).
- The backtacking lever (4) is to be shifted into its bottom position (the bar (5) is to be in contact with the backtacking lever (4)).

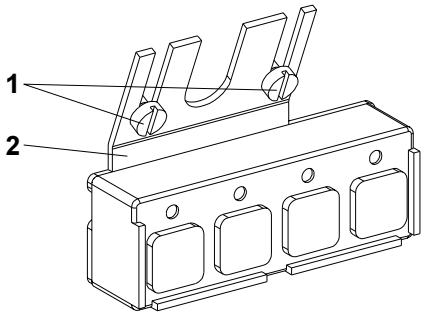

6.3 Setting the position of push-buttons

> **Caution! Danger of injury!**
> Switch off the main switch! Before starting the setting operation, wait until the motor stops!

- By loosening the screws (1), it is possible to set the height of the push-button holder.

6.4 Change of the function of push-buttons

The Function of the push-buttons can be changed in accordance with the possibilities given by the stopmotor (see instruction for use of stopmotor).

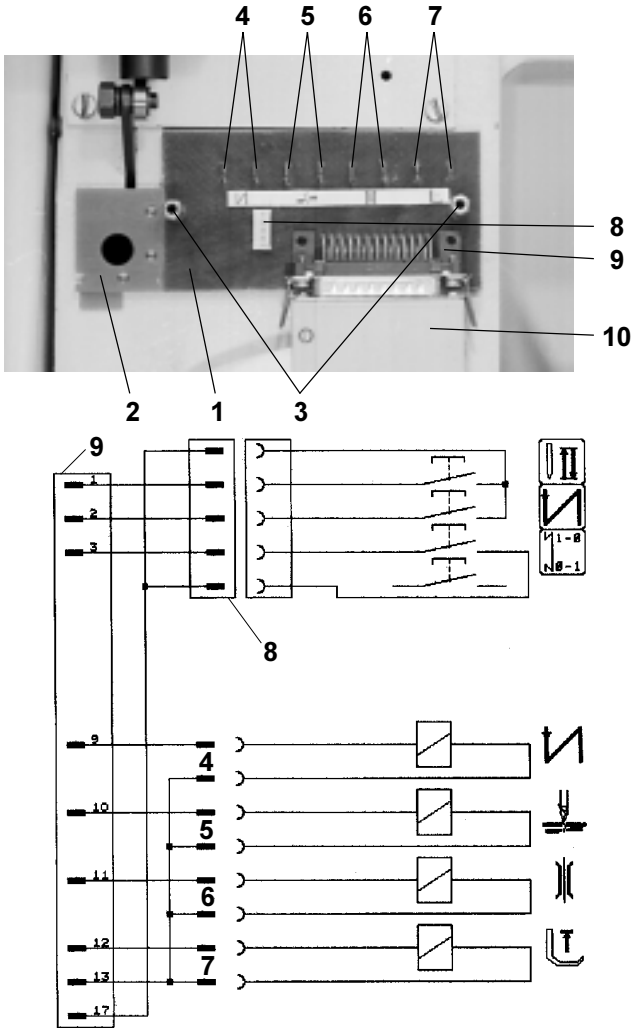

7. Connecting the electric elements on the machine head

The connection of the electric elements (electromagnets, backtacking, presser foot lifting, thread trimming, loosening of the tensioner and push-buttons) is made by means of a switchboard (1) fixed with its supporting plate (2) on the rear side of the head by means of two distance screws (3) (In the Fig., these electric elements are disconnected).

Connecting spots :
4 - backtacking electromagnet
5 - trimming electromagnet
6 - tensioner loosening electromagnet
7 - presser foot lifting electromagnet
8 - connector of push-button connecting
9 - connector of coupling the head with the stopmotor
10 - connecting cable of the head and stopmotor

Wiring diagram of connecting the electric elements of the machine head.

8. Drive, control panel, position sensor

The detailed information concerning the drive, the control panel and the setting of the position sensor is given in the manual of the drive and of the control panel.

9. Lighting

9.1 Mounting on the machine head

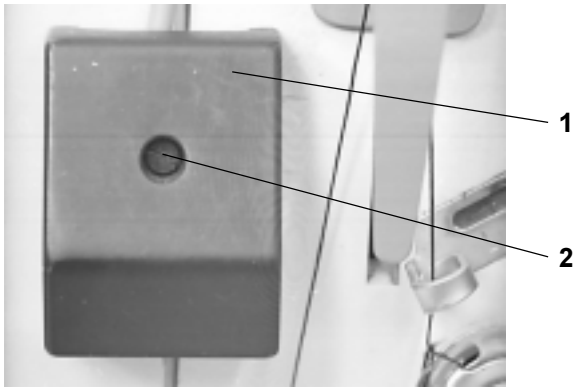

Caution! Danger of injury!
Switch off the main switch! Before starting the setting operation, wait until the motor stops!

- Mount the lamp on the machine head using the screws (3).
- The lighting (5) conductor is to be led through the guard (1) into the channel of the head on its rear side.

9.2 Lamp replacement

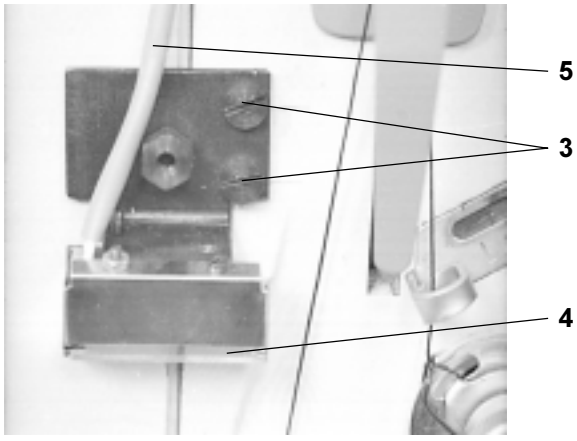

Caution! Danger of injury!
Switch off the main switch! Before starting the setting operation, wait until the motor stops!

- Remove the guard (1) by unscrewing the screw (2).
- Remove the lamp from the machine head by unscrewing two screws (3).
- Shift the glass (4).
- Loosen two screws of the lamp holder.
- Replace the lamp.

Use only 12 V, 10 W lamps. With higher values of the lamp power, there is a danger of overheating.

10. Maintenance

Caution! Danger of injury!
The maintenance operations should be performed only with the machine switched off and with the motor stopped!

In the following table there are given the operations which should be performed and the respective time intervals between the individual operations.

Operation	Time interval
Removal of the throat plate and its cleaning out.Cleaning out of the wheel feeder, hook and their surrounding space. Removal of the residues of material and threads from the top roller.	1 day
Checking the oil level in oil reservoirs.	1 month
Checking the hook wear. Checking the function of the safety clutch against the hook overload.	6 months
Checking the V-belt and the indented belts, checking the friction wheels of the drive convertion unit.	1 year

11. Setting the machine according to the sewing category

11.1 Introduction

This sewing machine enables sewing operations within a large extent from the light up to the heavy-duty sewing. The parameters of the respective sewing operation must be in accordance with the given machine setting which includes also the replacement of some components, such as the needle, the throat plate insert, the spring of the main tensioner, the top roller. For this reason, the setting of the machine is divided into 4 categories:
1 ... light sewing
2 ... medium sewing
3 ... medium heavy-duty sewing
4 ... heavy-duty sewing
In the factory, where this machine has been manufactured, the machine has been set with respect to the standard parameters of the required sewing category which is designed by the number included in the commercial designation of the machine. If the user desires changing the given setting to another sewing category, this operation should be performed by a specialized mechanician.

Caution!
When changing the sewing category, loosen the tensing up of the fixed trimming knife.
Otherwise there is a danger of destruction of the moving knife.

The standard parameters of sewing are described in the following paragraph. The actual parameters of sewing inside the given sewing category may be different, which means that the machine operative must adapt respectively the setting of the machine, e.g. the tension of the upper thread.

11.2 Table of setting the machine according to the sewing category

Commercial designation of the machine 4180 - 5XX - X

Sewing category	Standard sewing parameters				Standard machine setting 1)										
	Thickness of one material layer 2)	Number of material layers	Stitch length	Label number of thread PES	Needle size 8)	Sewing speed	Position of feeding lever pin	Width of needle plate insert hole	Feeder - pitch of teeth 9)	Presser top roller diameter	Presser top roller position	Thread tension 4) needle thread	Thread tension 4) shuttle thread 7)	Thread limiter	Spring of main tensioner 5)
	mm		mm		0,01 mm	st/min.		mm	mm	mm	mm	N	N		
-100	0.8	2	1.7	70	80	2500	1	1.2	0.4	35	10.5	3	1	L	522 099 004 80 080
-200	1	2	2.2 2.5	40	100	2500	1	1.5	0.4	35	10.5	4.5	1.5	M	
-300	1.5	1-2	3.5	20	130	1600	2 3)	2	0,6	35	10.5	5 - 8	2	M-H	522 080 262 083
-400	2	1-2 or 2-3	5	10 (20) 6)	160	1600	2 3)	2.4	1,2	35	10.5	10 - 12	2 - 2.5	H	

Setting as per chapter												
	Instructions for service			3.5.4.1.2	3.3.2	3.5.4.2.3	3.6.8.1	3.6.8.2			3.4.5	
	Instructions manual	6.5							6.4	6.4		
	Instructions for assembling		2.4 4.5									

1) The standard setting of the machine for the categories 3 and 4 concerns a decorative stitching, when it is difficult to match a good stitch interlocking with a faultless function of the thread trimming device. Otherwise, when sewing material of considerable overall thickness, it will be necessary to increase the overtopping of the teeth above the needle plate and to increase also the needle thread tension.
2) The thickness of a layer is measured using an engineer slide calliper with the pressure of jaws of about 10 N.
3) If the user will agree with the maximum stitch length of 5 mm, the pin of the feeding lever can be left in the position 1.
4) The values of tension are only orientative ones and it is necessary to adapt especially the tension of the shuttle thread according to the stiffness of the material. An excessive tension of the threads when sewing soft materials causes material wrinkling.
5) One of the two springs ist mounted, the other one is enclosed in the machine accessories.
6) When performing decorative sewing, it is possible to use the shuttle thread having the label No 20 - the interval between the two replacements of the shuttle bobbin will be double.
7) When changing markedly the sewing category together with changing the tension of the shuttle thread, it is necessary to modify the tension of the retaining spring of the trimming device according to the paragraph 4.7.
8) When changing markedly the sewing category together with a marked change of the needle number, it is necessary to correct the setting of the distance of the shuttle from the needle, according to the paragraph 3.1.3 and, at the same time, the setting of the fixed trimming knife of the trimming device, according to the par. 4.6.
9) There are in use various types of feeders with the purpose of avoiding imprinting the teeth in the lining leather. Otherwise, it is possible to use any feeder.